22nd International Conference on Sustainable Energy Technologies
Kuala Lumpur, Malaysia, 13 to 15 August 2026 · ISBN 978-1-995850-00-9 · ISSN 2978-4387

CONFERENCE PAPER · ENERGY STORAGE & CONVERSION

Dynamically reconfigurable series parallel photovoltaic module to enhance energy generation during shadow effect in solar vehicles

Pradyum Kaneria[1*], K. S. Reddy[1]

[1] Heat Transfer and Thermal Power Laboratory, Department of Mechanical Engineering, Indian Institute of Technology Madras, Chennai, Tamil Nadu, India

RECEIVED 18 January 2026 · REVISED 14 February 2026 · ACCEPTED 24 February 2026
PRESENTED 13 to 15 August 2026 · PUBLISHED 23 November 2026

ABSTRACT

Electric vehicles (EVs) are pivotal to sustainable mobility, with their global adoption rapidly increasing. However, a significant drawback of EVs compared to traditional vehicles is the lengthy charging time. One promising solution is integrating solar panels on the vehicle's surface, enabling onboard charging and extending the vehicle's range. Companies have begun commercializing solar-powered vehicles, using solar photovoltaic (PV) systems connected to a Maximum Power Point Tracker (MPPT) to optimize battery charging. MPPT systems require a minimum input voltage to function effectively. In urban settings, solar vehicles often encounter dynamic conditions, such as partial shading, which can severely limit energy generation. When the MPPT's minimum voltage isn't achieved, the entire solar array may fail to generate power, negatively impacting vehicle performance. To address this issue, we propose a dynamic PV array capable of reconfiguring its series-parallel connections under partial shading conditions, ensuring that the MPPT's minimum voltage is maintained. Our method employs a 2×2 array of SunPower Maxeon NE3 cells, where two cells connected in series, achieving a terminal voltage of 1.42 V, while the other two connect in parallel for a total output of 0.42 W. Using Simulink for modeling, the comparator detects voltage drops and reconfigures connections using relay switches. The reconfigurable PV setup can produce 79.65% of its total capacity under partial shading, in contrast to just 17.50% for a standard PV system. This innovative approach significantly enhances energy generation and holds great promise for advancing sustainable mobility across diverse climatic regions.

KEYWORDS Solar vehicle, Partial shadow effect, Reconfigurable PV, Onboard charging

1. Introduction

Global mobility is undergoing a structural shift toward sustainability, a transition formally reflected in United Nations Sustainable Development Goal 11, which identifies sustainable mobility as a critical target for 2030 (United Nations 2023). Personal vehicles remain the dominant contributor to mobility in developing economies where public transport infrastructure is still maturing, and electric vehicles (EVs) are increasingly displacing internal combustion engine vehicles for daily commuting. Beyond the environmental case, EVs are also becoming an economic necessity: with fuel prices rising steadily, an EV can cover the same distance at a fraction of the cost, a factor driving adoption across India, South Africa and Indonesia.

Despite this momentum, EVs remain constrained by long charging times and by charging infrastructure that is sparse relative to the scale of highway networks, particularly outside dense urban corridors. Several strategies have been proposed to mitigate this range limitation. Battery swapping, in which a depleted battery is exchanged for a charged one, offers rapid turnaround but is

* Corresponding author. Email address: pradyum.edu@gmail.com (Pradyum Kaneria)

© 2026 The Author(s).
Published by Caravel Press.

doi.org/10.65582/set.2026.001

constrained by the lack of a standardised form factor and mounting geometry across vehicle models (Jain *et al.* 2020). Dynamic wireless charging, where charging coils are embedded in the road surface, allows a vehicle to charge while driving, but the capital cost of installing coils at close intervals along thousands of kilometres of highway makes the approach economically prohibitive at scale (Kadav and Asher 2019). Static recharge systems (SRS), such as the tram-charging infrastructure studied for Turin, Italy, work well for public transport operating on fixed routes, but this approach does not generalise to cities that lack an existing tram network, owing to space and scalability constraints (Prussi *et al.* 2024).

Onboard solar charging avoids each of these limitations: it requires no additional road or city infrastructure, it charges the vehicle while it is in motion or parked, and it removes the need for the driver to seek out or pay for a charging station. The central obstacle to this approach is the limited surface area available on a vehicle body for photovoltaic (PV) cells, which places a premium on maximising the energy yield of every available cell. Several manufacturers have already begun commercialising onboard solar charging: Lightyear's solar layer technology has demonstrated up to roughly 70 km of additional daily range under ideal conditions (Lightyear 2025), while Aptera's production-intent solar EV integrates solar cells across the hood, roof and hatch to target up to 40 miles (≈64 km) of driving per day without grid charging, and has logged real-world validation runs of up to 4.4 kWh of daily solar generation (Aptera Motors 2026a; Aptera Motors 2026b). These commercial efforts confirm both the promise and the practical difficulty of vehicle-integrated PV: even small amounts of shading from buildings, trees or the vehicle's own geometry can disproportionately reduce output.

The effect of partial shading on series-connected PV strings is a long-studied problem in stationary solar installations: when cells in a string receive unequal irradiance, the lowest-generating cell limits the current through the entire string, producing a disproportionate power loss and, in more severe cases, hotspot heating. Reconfigurable PV architectures address this by dynamically altering the interconnection topology between series and parallel arrangements depending on the shading pattern. Calcabrini *et al.* (2021) proposed a fully reconfigurable series-parallel PV module for rooftop installations in urban environments, in which each cell block is measured individually and the switching matrix selects the configuration that maximises output power under the sensed shading pattern. In follow-up experimental work, the same group validated a full-scale outdoor prototype over a four-month period and reported a 10.2% higher energy yield under partial shading relative to a fixed-interconnection module with bypass diodes, at the cost of a 1.9% yield reduction under uniform illumination due to switching-matrix losses (Calcabrini *et al.* 2023). Related hierarchical switching-block architectures have reported further reductions in mismatch loss when benchmarked against bridge-linked, total-cross-tied and series-parallel baseline topologies (Ameen *et al.* 2023), and quadrant-swapping reconfiguration algorithms have been proposed as an alternative for larger cell matrices (Thangaraj *et al.* 2025).

A limitation shared by this body of work is that it targets stationary installations, where the shading pattern from surrounding buildings or trees changes gradually over the course of a day. A vehicle-mounted array experiences shading transitions on the order of seconds as it moves past trees, buildings or other vehicles, which places a much tighter latency requirement on the sensing-and-switching loop than any of the above studies address. The dynamic shading problem is well documented in solar racing vehicles. In the World Solar Challenge, cluster arrangement and shadow-minimisation strategies have been studied to maximise irradiance capture along the Stuart Highway in Australia (Kaneria and Reddy 2025).

A second, related body of literature addresses the behaviour of MPPT controllers under partial shading. MPPT algorithms are designed to track the global maximum power point on a PV array's power-voltage curve, but under non-uniform irradiance this curve can develop multiple local maxima, and conventional perturb-and-observe or incremental-conductance algorithms frequently converge on a local rather than global maximum (Chalh *et al.* 2022). Separately from this tracking-

accuracy problem, every MPPT converter also has a hard minimum input voltage and power threshold below which it cannot begin or sustain operation at all; commercial MPPT charge controllers typically specify this cut-in voltage explicitly, and if the array's terminal voltage falls below it, the converter disengages entirely regardless of how much current the array could otherwise supply (Clever Solar Power 2023).

This paper addresses that specific failure mode by introducing a dynamically reconfigurable series-parallel PV array. Rather than passively absorbing the current-mismatch penalty of shading, the array senses a voltage drop and reconfigures its cell interconnections in real time so that the array terminal voltage remains within the MPPT's operating window. Because a moving vehicle experiences shading patterns that change far more quickly than a stationary rooftop installation, the reconfiguration must occur with near-zero computational latency and negligible energy overhead, a constraint that shapes the passive, relay-based architecture proposed in this work.

2. System Description and Schematic

The proposed system is built around a 2×2 grid of SunPower Maxeon NE3 solar cells, each rated at an open-circuit voltage (Voc) of 0.73 V and a short-circuit current (Isc) of 6.18 A at 1000 W/m^2 irradiance (Mateja *et al.* 2023). In the array's default configuration, the four cells are arranged as 2 series × 2 parallel (2S2P): Cell 1 and Cell 2 form one series pair, Cell 3 and Cell 4 form a second series pair, and the two pairs are connected in parallel. This configuration is chosen as the default because, under uniform illumination, it delivers the lowest per-branch current and therefore the lowest resistive (I^2R) loss.

A voltage comparator continuously senses the terminal voltage of each cell pair. When the irradiance on one pair drops, for example due to a passing shadow from a tree, building or adjacent vehicle, the comparator detects the resulting voltage drop and triggers a 5 V bistable single-pole double-throw (SPDT) relay. The relay reconfigures the shaded pair from a parallel to a series connection with the unshaded pair, raising the composite terminal voltage back above the MPPT's minimum cut-in threshold. As illumination is restored, the comparator detects the recovered voltage and the relay reconfigures the array back to its default 2S2P state. Figure 1 shows the block-level schematic of this arrangement, including the switching matrix, comparator, MPPT stage and battery interface.

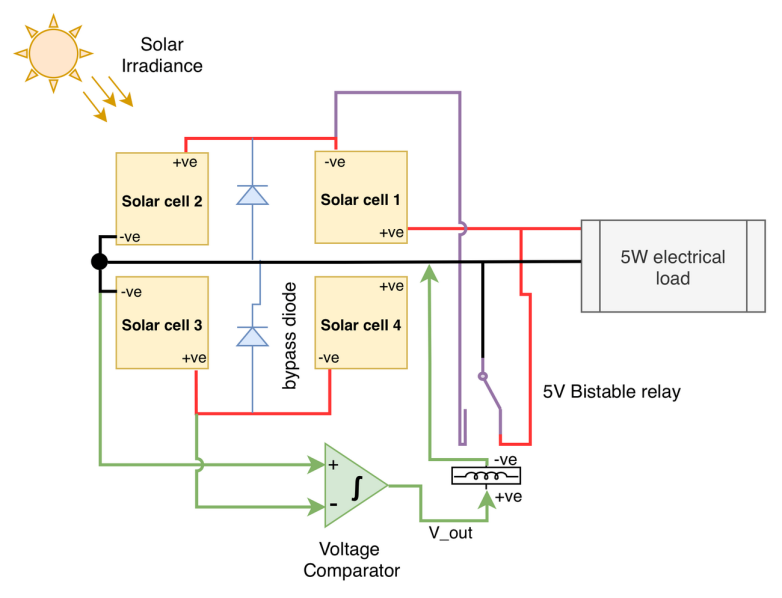

Figure 1. Block schematic of the dynamically reconfigurable 2S2P photovoltaic array, showing the SPDT relay switching matrix, voltage comparator sensing path, and downstream 5 W electrical load.

The choice of a bistable relay rather than a conventional monostable relay is deliberate: a bistable relay only draws power during the moment of actuation and holds its state passively thereafter, whereas a conventional relay would continuously draw holding current for as long as it remains in the actuated state. Because the entire premise of the design is that the energy recovered by reconfiguration must substantially exceed the energy spent switching, this distinction is central to the system's net energy benefit, and is discussed quantitatively in Section 5.

3. Modelling in Simulink

The reconfigurable array and its baseline (non-reconfigurable) counterpart were modelled in MATLAB/Simulink using the manufacturer characteristics of the SunPower Maxeon NE3 cell (Voc = 0.73 V, Isc = 6.18 A at 1000 W/m^2) (Mateja *et al.* 2023). Each simulation was run for a duration of 3000 seconds. A constant irradiance of 600 W/m^2 was applied to Cells 1 and 2 throughout the run, representing the unshaded portion of the array, while Cells 3 and 4 were subjected to a time-varying shading profile constructed from a sinusoidal irradiance function followed by a ramp function that brings irradiance to zero and holds it there.

The shading interval was set to 750 seconds, 12.5 minutes or 25% of the total simulation time, to represent a realistic onboard charging scenario for a solar vehicle travelling through an urban environment, where periodic shading from buildings, trees and overpasses is expected but does not persist for the entire journey. The remaining 75% of the simulation duration represents unobstructed irradiance, during which the array is expected to remain in its default 2S2P configuration.

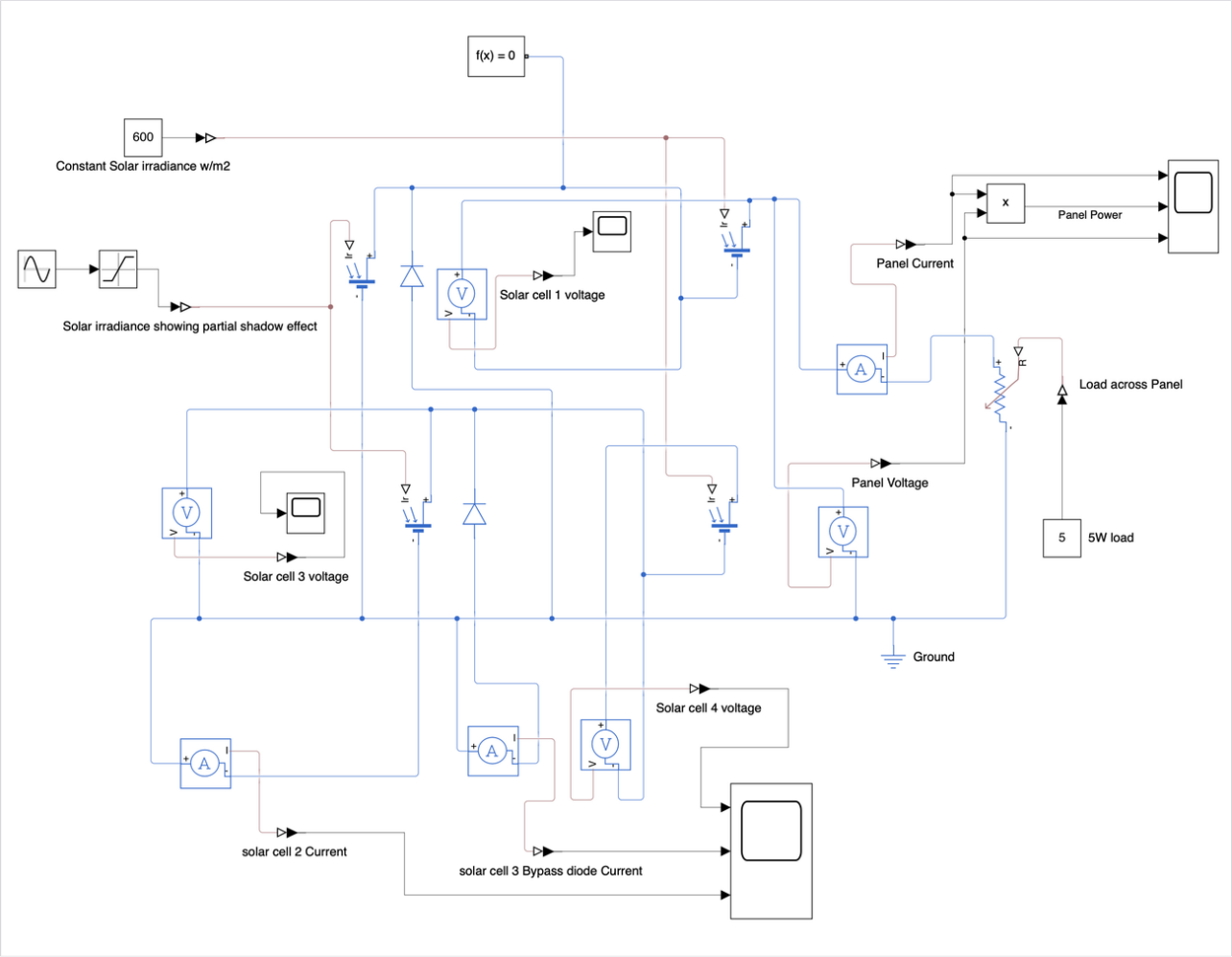

Figure 2. Simulink baseline model for the fixed 2S2P photovoltaic array.

Two model variants were simulated under identical irradiance profiles: (i) a baseline model in which the array interconnection is fixed at 2S2P throughout, with no reconfiguration logic, shown in Figure 2 and (ii) the proposed model, in which the comparator-and-relay logic described in Section 2 is active and permitted to reconfigure the array between 2S2P and 2S as irradiance changes, as shown in Figure 3. Comparing the two models under identical shading inputs isolates the effect of reconfiguration itself from any other variable in the system.

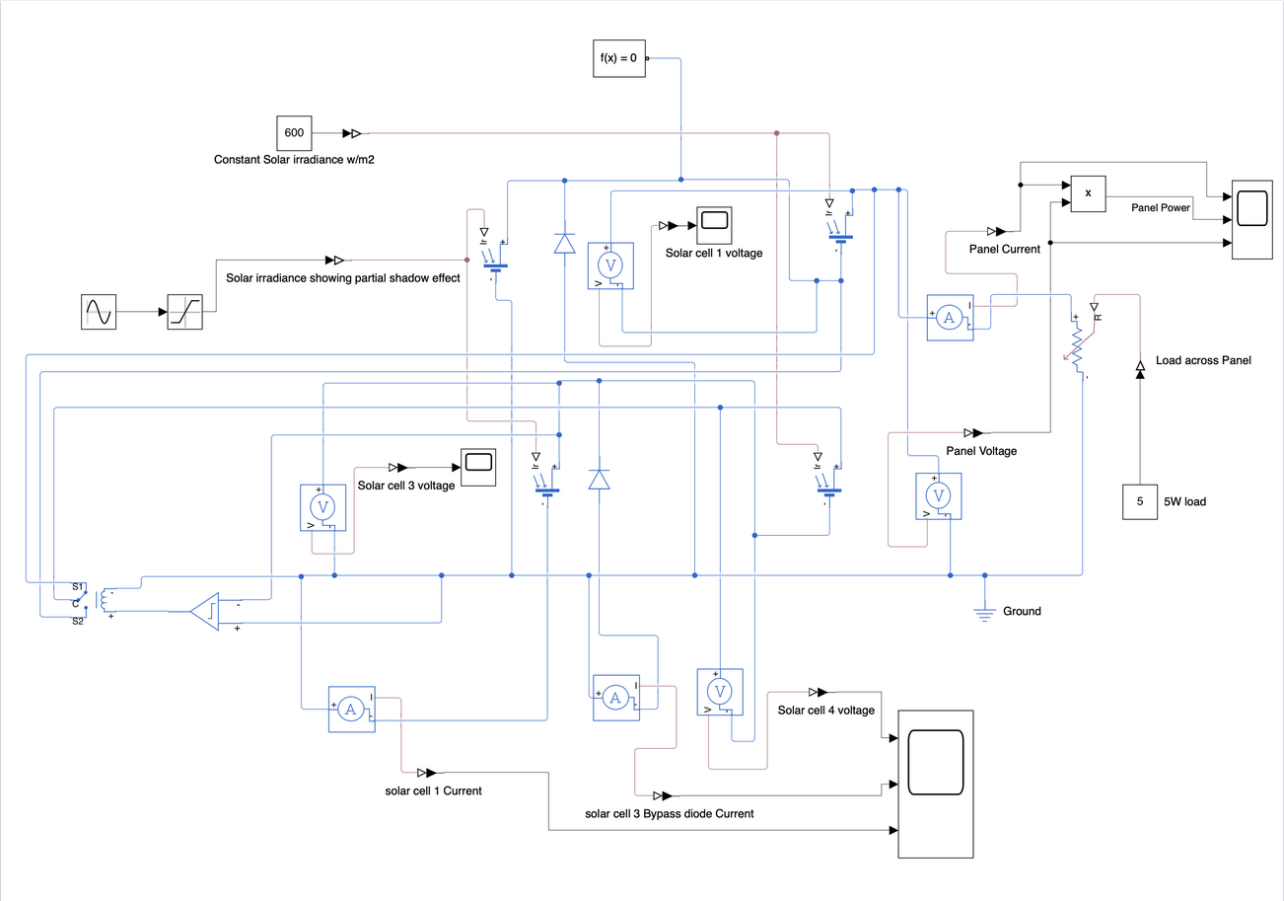

Figure 3. Simulink proposed model for the reconfigurable 2S2P photovoltaic array.

4. Methodology

The reconfiguration logic follows a simple, low-latency decision loop designed to be implementable in near-passive analogue hardware rather than in a microcontroller, so that the switching decision does not depend on computation time. The comparator continuously monitors the voltage across each cell pair. If the sensed voltage V(sense) falls below the minimum voltage threshold required by the downstream MPPT, this is interpreted as the onset of partial shading, and the comparator issues a single actuation pulse to the bistable SPDT relay. This reconfigures the affected pair from a parallel connection to a series connection with the unaffected pair, taking the array from 2S2P to a 2S arrangement, which raises the terminal voltage sufficiently to keep the MPPT within its operating range even though the shaded cells continue to supply less current.

Once irradiance is restored to Cell 2 or Cell 3 and the comparator senses that the voltage condition for the default configuration is again satisfied, the relay is actuated a second time to return the array to the 2S2P configuration, restoring the lower-resistive-loss default state for continued unshaded operation. This two-state decision loop, summarised in Figure 4, runs continuously for the duration that the vehicle is in operation, re-evaluating the shading condition and switching state as needed.

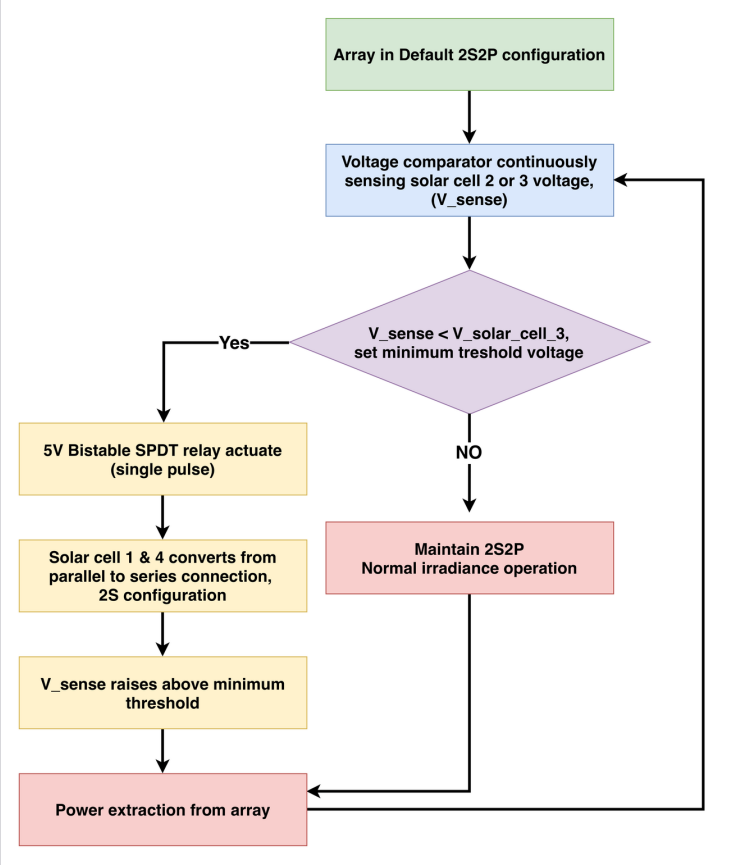

Figure 4. Decision flow governing array reconfiguration between the default 2S2P state and the shading-triggered 2S state.

Because the relay is bistable, it consumes energy only during the instant of actuation and none while holding either state. This is a deliberate design constraint: for the reconfiguration strategy to be worthwhile, the energy recovered by avoiding an MPPT disconnection event must exceed, by a wide margin, the energy spent switching. A conventional (monostable) relay, which requires continuous holding current for as long as it remains actuated, would erode this margin substantially and is therefore unsuitable for this application.

5. Results and Discussion

Figure 5, Figure 6 and Figure 7 show the simulated panel current, voltage and power over the full 3000-second run for the baseline (fixed 2S2P) and proposed (reconfigurable) arrays respectively, under the identical sinusoidal shading profile applied to Cells 3 and 4. Both traces begin from an unshaded operating point of approximately 1.43 V, 0.286 A and 0.41 W and decline smoothly as shading ramps in. In the baseline case, the panel voltage and current fall sharply as the array approaches its open-circuit condition, and settle onto a flat plateau once the array is fully shaded. In the proposed case, the panel voltage and current initially fall along the same trajectory as the baseline, but the comparator detects that the sensed voltage V(sense) has dropped below the MPPT's minimum threshold and rapidly reconfigures the array, causing panel voltage to spike upward before settling onto a new, substantially higher plateau. When irradiance subsequently increases again, the panel power rises steadily and briefly overshoots its eventual resting level, before the comparator detects that V(sense) has risen above the recovery threshold and switches the array back to 2S2P, at which point voltage and power step down and then resume a steady rise back to the pre-shading trajectory.

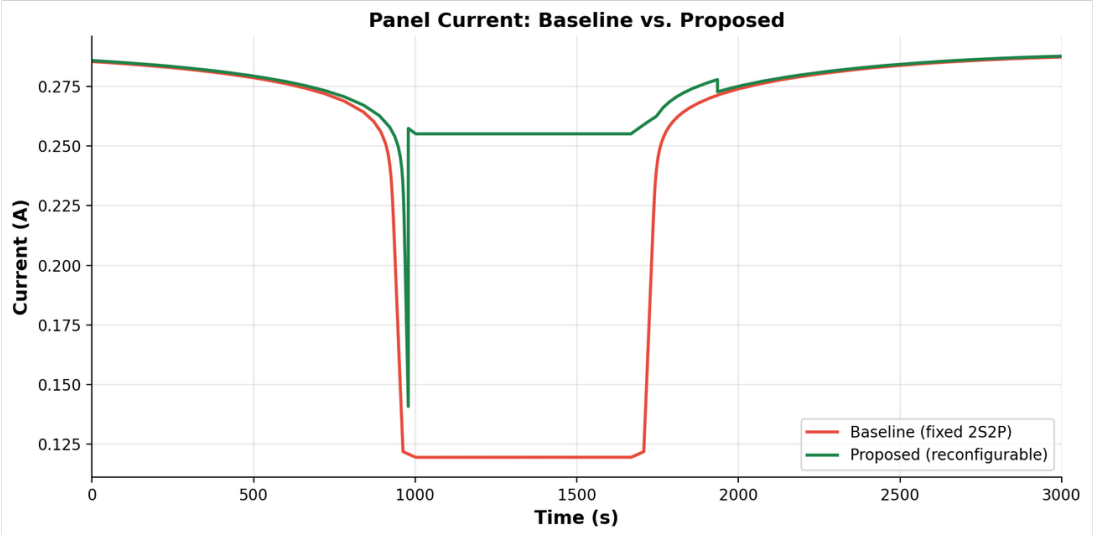

Figure 5. Simulated panel current over 3000 seconds in Simulink. Green shows the reconfigurable photovoltaic array output and red the fixed (2S2P) configuration.

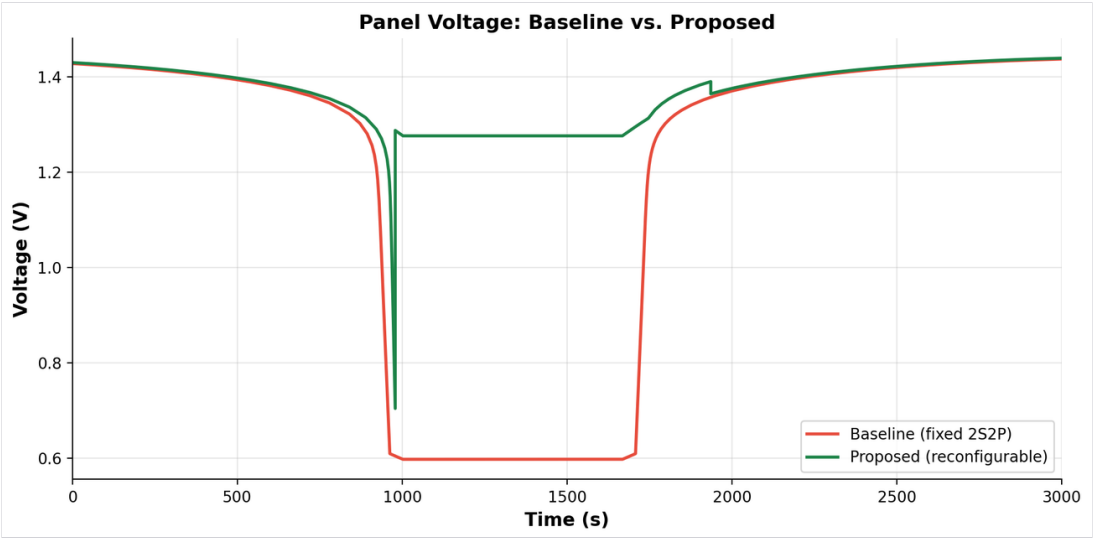

Figure 6. Simulated panel voltage over 3000 seconds in Simulink. Green shows the reconfigurable photovoltaic array output and red the fixed (2S2P) configuration.

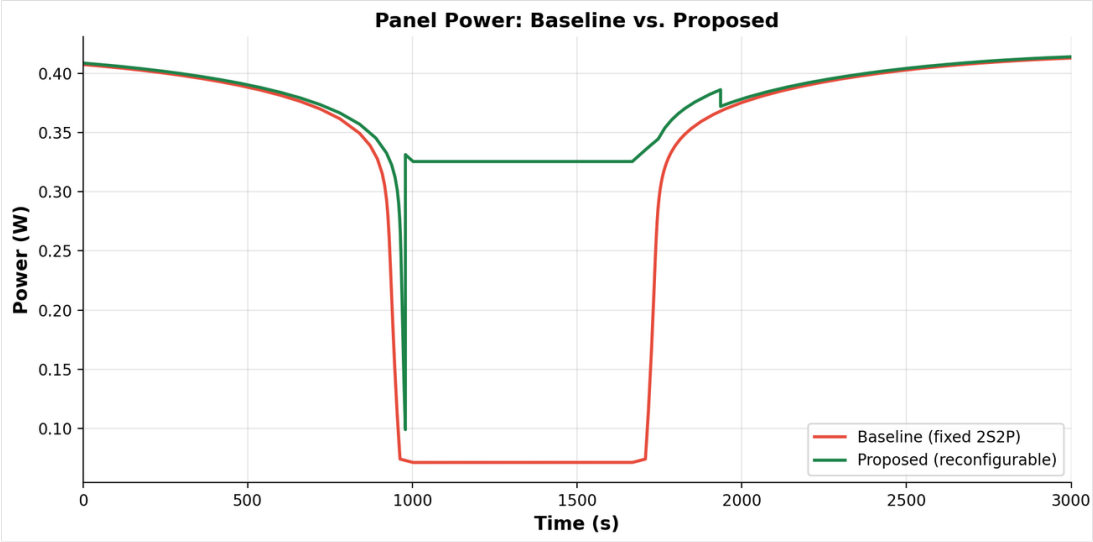

Figure 7. Simulated panel power over 3000 seconds in Simulink. Green shows the reconfigurable photovoltaic array output and red the fixed (2S2P) configuration.

Comparing the two outcomes directly, the baseline array settles at a panel voltage of 0.597 V and a panel current of 0.119 A once fully shaded, for a panel power of 0.0713 W — 17.5% of the array's unshaded output. The proposed array, once reconfigured, settles at a panel voltage of 1.276 V and a panel current of 0.255 A, for a panel power of 0.3255 W — 79.65% of the array's unshaded output. This improvement occurs because the parallel connection between the shaded and unshaded cell pairs is switched to a series connection once shading is detected, so the shaded pair is no longer acting as a current-limiting bottleneck on the whole array. Table 1 summarises the simulated electrical output of the baseline (fixed 2S2P) and proposed (reconfigurable) arrays under the identical partial-shading profile described in Section 3.

Table 1. Simulated electrical output of the baseline and proposed arrays under identical partial-shading conditions.

Parameter	Baseline (fixed 2S2P)	Proposed (reconfigurable)	Change
Panel voltage (V)	0.597	1.276	+113.7%
Panel current (A)	0.119	0.255	+114.3%
Panel power (W)	0.0713	0.326	+357.2%
Usable power (% of potential)	17.50%	79.65%	+62.15 pts
Energy over shaded interval (750 s)	53.5 J	244.1 J	+190.6 J
Energy delivered over full 3000 s run	917.0 J	1146.9 J	+229.9 J (+25.1%)

There is another important consideration relating to the MPPT stage of a solar panel system, as discussed by Kaneria and Reddy (2025). MPPT converters have a working voltage range for boosting the array voltage to the battery bus; if the array's terminal voltage falls below the lower bound of this range, the converter cannot extract any power from the array at all, regardless of how much current the array could otherwise supply. For example, if the MPPT for this 2×2 grid has a lower operating bound of 0.8 V, the baseline case, settling at 0.597 V which would fall entirely outside this range and the array would deliver zero usable power to the battery for the full duration of the shading event, despite still generating a small amount of power internally. The proposed case, settling at 1.276 V, remains comfortably within a typical MPPT operating window throughout the shaded interval and continues to deliver power to the battery without interruption.

Over the fully shaded interval of 750 seconds (12.5 minutes, 25% of the simulated run), trapezoidal integration of the logged power data shows the baseline configuration delivers 53.5 J while the

proposed configuration delivers 244.1 J, a recovery of 190.6 J that would otherwise have been unavailable to the MPPT. Integrating over the complete 3000-second run, which also captures the additional energy the proposed array collects during the brief recovery-phase overshoot visible in Figure 7, before the array switches back to 2S2P, the baseline configuration delivers a total of 917.0 J against 1146.9 J for the proposed configuration, a net gain of 229.9 J, or 25.1%, across the full simulated journey.

This energy gain is achieved with minimal switching overhead because the comparator and relay used is a 5 V SPDT bistable relay, which does not consume energy throughout the actuation period, only at the instant of triggering. The logged data shows the relay switches exactly twice over the full run, once when shading is detected and once when irradiance recovers, with each transition resolving within a single simulation time step and no continuous holding current implied between them. This ensures the energy savings reported above are close to the full amount recovered by the reconfiguration strategy; a conventional relay, which would draw a continuous holding current for the full 750 seconds the array spends in its reconfigured state, would consume a comparable amount of energy for actuation and make the overall savings considerably less attractive.

6. Conclusion and Future Work

This paper presented a dynamically reconfigurable series-parallel photovoltaic array intended to mitigate the impact of partial shading on onboard solar charging for electric vehicles. By sensing cell-pair voltage and reconfiguring the array from a parallel to a series interconnection through a near-passive, bistable relay, the proposed system keeps the array's terminal voltage within the operating range required by a downstream MPPT, which a fixed-interconnection array cannot guarantee under shading. In simulation, the proposed configuration recovered approximately 79.65% of the array's rated potential power under partial shading, compared with only 17.50% for the fixed baseline configuration, a substantial improvement achieved with negligible switching-energy overhead due to the bistable relay design.

These results support the broader case for onboard solar charging as a scalable, infrastructure-free contribution to EV range extension, particularly for urban driving conditions where shading from buildings, trees and overpasses is unavoidable. Because the switching decision requires no computation and operates on a near-instantaneous analogue sensing loop, the approach is well suited to the fast-changing shading conditions experienced by a moving vehicle, in contrast to reconfiguration strategies developed for stationary rooftop PV installations. The main limitation of this study is that it evaluates a single small 2×2 array under a synthetic shading profile rather than a full-scale, road-tested system; future work will extend this architecture to larger cell arrays representative of a full vehicle-integrated PV system, validate the reconfiguration logic against empirically measured driving-cycle shading data, and quantify the switching-matrix loss under uniform illumination to establish the net energy gain. This approach directly supports UN Sustainable Development Goal 11 by advancing a solution for sustainable, infrastructure-independent mobility across diverse climatic regions.

Declarations

Author contributions. Pradyum Kaneria: Conceptualization, Investigation, Formal analysis, Writing (original draft), Validation, Data curation, Resources, Software. K. S. Reddy: Conceptualization, Methodology, Formal analysis, Data curation, Writing (review and editing), Visualization, Supervision, Project administration, Resources, Software, Funding acquisition.

Funding. This research received no specific funding.

Conflicts of interest. The authors declare no competing interests.

Data availability. Not applicable. This study did not generate or analyse any datasets.

References

Ameen, Fatimah; Siddiq, Abdulrahman; Trohák, Attila; Benotsmane, Rabab (2023) 'A Scalable Hierarchical Dynamic PV Array Reconfiguration under Partial Shading', *Energies*, 17(1), pp. 181. Available at: https://doi.org/10.3390/en17010181

Aptera Motors (2026a) *Powered by Sunlight: A Look at Solar Performance*. Available at: https://aptera.us/solar-data/

Aptera Motors (2026b) *Vehicle – Aptera Solar EVs*. Available at: https://aptera.us/vehicle/

Calcabrini, Andres; Muttillo, Mirco; Weegink, Raoul; Manganiello, Patrizio; Zeman, Miro; Isabella, Olindo (2021) 'A fully reconfigurable series-parallel photovoltaic module for higher energy yields in urban environments', *Renewable Energy*, 179, pp. 1-11. Available at: https://doi.org/10.1016/j.renene.2021.07.010

Calcabrini, Andres; Muttillo, Mirco; Zeman, Miro; Manganiello, Patrizio; Isabella, Olindo (2023) 'Electrical performance of a fully reconfigurable series-parallel photovoltaic module', *Nature Communications*, 14(1). Available at: https://doi.org/10.1038/s41467-023-43927-3

Chalh, Abdelilah; Chaibi, Redouane; Hammoumi, Aboubakr El; Motahhir, Saad; Ghzizal, Abdelaziz El; Al-Dhaifallah, Mujahed (2022) 'A novel MPPT design based on the seagull optimization algorithm for photovoltaic systems operating under partial shading', *Scientific Reports*, 12(1). Available at: https://doi.org/10.1038/s41598-022-26284-x

Clever Solar Power (2023) *What is MPPT Minimum Input Voltage?* Available at: https://cleversolarpower.com/mppt-minimum-input-voltage/

Jain, Shubham; Ahmad, Zaurez; Alam, Mohammad Saad; Rafat, Yasser (2020) 'Battery Swapping Technology', *2020 5th IEEE International Conference on Recent Advances and Innovations in Engineering (ICRAIE)*, pp. 1-4. Available at: https://doi.org/10.1109/icraie51050.2020.9358366

Kadav, Parth; Asher, Zachary D. (2019) 'Improving the Range of Electric Vehicles', *2019 Electric Vehicles International Conference (EV)*, pp. 1-5. Available at: https://doi.org/10.1109/ev.2019.8892929

Kaneria, Pradyum; Reddy, K. S. (2025) 'Minimizing shadow effects to optimize solar energy input in the World Solar Challenge', *Green Technology & Innovation*, 1, pp. 1-18. Available at: https://doi.org/10.36922/gti025090004

Lightyear (2025) *Driving the future — Solar technology for mobility applications*. Available at: https://lightyear.one/articles/driving-the-future-lightyears-solar-panel-technology-for-automotive-applications

Mateja, Krzysztof; Skarka, Wojciech; Peciak, Magdalena; Niestrój, Roman; Gude, Maik (2023) 'Energy Autonomy Simulation Model of Solar Powered UAV', *Energies*, 16(1), pp. 479. Available at: https://doi.org/10.3390/en16010479

Prussi, Matteo; Cota, Alfredo Felix; Laveneziana, Lorenzo; Chiantera, Giuseppe; Guglielmi, Paolo (2024) 'Electric Vehicle Charging from Tramway Infrastructure: A New Concept and the Turin Case Study', *Energies*, 17(5), pp. 984. Available at: https://doi.org/10.3390/en17050984

Thangaraj, Hariharasudhan; Chokkalingam, Bharatiraja; Aruchamy, Sakthivel; David, Prince Winston; Padmanaban, Sanjeevikumar (2025) 'Quadrant swapping technique for partial shaded solar photovoltaic system', *Scientific Reports*, 15(1). Available at: https://doi.org/10.1038/s41598-025-15120-7

United Nations (2023) *The Sustainable Development Goals Report Special edition 2023*. Available at: https://sdgs.un.org/sites/default/files/2023-07/The-Sustainable-Development-Goals-Report-2023_0.pdf

HOW TO CITE THIS PAPER

Kaneria, P. and Reddy, K. S. (2026). Dynamically reconfigurable series parallel photovoltaic module to enhance energy generation during shadow effect in solar vehicles. In: *Proceedings of the 22nd International Conference on Sustainable Energy Technologies (SET2026)*, Kuala Lumpur, Malaysia, 13 to 15 August 2026. Caravel Press, pp. 1–10. ISBN 978-1-995850-00-9. ISSN 2978-4387. https://doi.org/10.65582/set.2026.001

COPYRIGHT AND LICENCE

© 2026 The Author(s). This is an open access paper distributed under the terms of the Creative Commons Attribution (CC BY 4.0) licence, which permits unrestricted use, distribution and reproduction in any medium, provided the original work is properly cited.

WSSET World Society of Sustainable Energy Technologies Organised by the World Society of Sustainable Energy Technologies. Published by Caravel Press.