22nd International Conference on Sustainable Energy Technologies
Kuala Lumpur, Malaysia, 13 to 15 August 2026 · ISBN 978-1-995850-00-9 · ISSN 2978-4387

CONFERENCE PAPER · ENERGY STORAGE & CONVERSION

The effect of storage tank capacity on a solid oxide fuel cell (SOFC)–compressed CO2 energy storage (CCES) combined cycle energy storage and power generation system

Tianxiang Wang[1*]

[1] Shanghai Energy Construction Engineering Design and Research Co., Ltd., Shanghai 200126, China

RECEIVED 9 May 2026 · REVISED 5 June 2026 · ACCEPTED 12 June 2026
PRESENTED 13 to 15 August 2026 · PUBLISHED 23 November 2026

ABSTRACT

CO_2 with its low critical temperature and pressure and high energy storage density, is considered a promising large-scale energy storage technology. However, due to the ineffective utilization of substantial amounts of low-grade waste heat, compressed CO_2 energy storage demonstrates relatively lower efficiency compared to chemical energy storage. Solid Oxide Fuel Cells (SOFCs) exhibit high efficiency, the capability to utilize low-temperature waste heat, and the generation of high-temperature waste heat. These characteristics synergize with compressed CO_2 energy storage to enable mutual utilization of high- and low-temperature waste heat, offering a novel approach for integrating energy storage and power generation systems. This paper proposes a novel SOFC-CO_2 combined cycle energy storage and power generation system, detailing its architecture and operating principles, presenting thermodynamic models for key components, and analyzing the impact of storage tank capacity on system performance. The results demonstrate that the SOFC-CO_2 system effectively enables cascaded utilization of high- and low-temperature waste heat, significantly enhancing the efficiency of both the compressed CO_2 and SOFC systems, and provides a viable technical solution for long-duration compressed gas energy storage.

KEYWORDS Solid oxide fuel cells, Compressed CO_2 energy storage, Combined cycle, Storage tank capacity

Nomenclature

Q	heat, kW
W	power, kW
T	temperature, K
R_g	gas constants, J/(mol·K)
p	pressure, kPa
m	mass flow rate, kg/s
c_p	specific heat capacity at constant pressure, kJ/(kg·K)
q_m	flow rate, kg/s
C_{st}	storage tank capacity, t
t_{dis}	discharge period, h
t_{ch}	charging period, h

* Corresponding author. Email address: txwang_secedr@163.com (Tianxiang Wang)

© 2026 The Author(s).
Published by Caravel Press.

doi.org/10.65582/set.2026.011

Greek symbols

φ	Pressure Ratio
η	Efficiency
ζ	heat exchange effectiveness

Subscripts

H	high temperature
L	low- temperature
net	network
P	output power
C	power consumption
h	hot fluid
c	cold fluid
g	flue gas
in	import
out	export
LNG	natural gas
GTE	gas turbine
fer	the energy recovery of flue gas
ge	electricity generator
1,2,3⋯	process node

Acronyms

ORC	organic Rankine cycle
LC	low-pressure compressor
IC	intercooler
HC	high-pressure compressor
HR	reheater
HH	high-pressure heaters
HE	high-pressure expander
LH	low-pressure heaters
LE	low-pressure expander
HS	heat sink

1. Introduction

Renewable generation such as solar, wind and tidal energy therefore has to be expanded (Golding 1976; Vargas *et al.* 2019; Singh 2013; Hayat *et al.* 2019), together with power generation technologies of higher efficiency and better structure (Zhang 2020; Kanoglu *et al.* 2007; Cormos 2012). The output of these sources is intermittent and unpredictable, however, which places the stability of the grid at risk and requires monitoring and management across the load, power and grid sectors (Toledo *et al.* 2010). Energy storage is the link that reconciles an intermittent supply with a steady electrical output, and the performance of the storage unit, rather than that of the generation unit alone, determines the value of the whole chain. Compared with electrochemical energy storage, the compressed CO_2 energy storage (CCES) has higher safety in energy storage. It is suitable for long-term and large-scale energy storage and distributed energy system, and is becoming one of the possible energy storage technologies in the future. It has also received extensive attention and has been put into demonstration operation.

Solid oxide fuel cells (SOFCs) are attractive as the generation unit of a distributed energy system because of their high energy conversion rate, their compatibility with hydrogen, carbon monoxide and methane, and the high-grade waste heat in their exhaust, whose temperature reaches 400-600 °C. Recovering this heat has been the subject of a large body of work. The compressed CO2 energy storage system has relatively low overall energy efficiency recently. However, before the expansion power generation process, when the CO_2 is heated by the high-temperature residual heat, its overall energy efficiency will significantly increase. Furthermore, the compressed CO_2 energy storage system also generates low-temperature waste heat, which can be used to preheat the air for the SOFC, generating higher-temperature flue gas that can be used to heat the CO_2, thus achieving the mutual utilization of the waste heat from both sides. Based on this, we constructed a combined cycle system integrating SOFC and compressed CO_2 storage, achieving the complementary utilization of waste heat.

In the combined cycle based on SOFC, the SOFC-gas turbine (GT) combination is the most mature solution, such as research works (Shamoushaki *et al.* 2017; Huang *et al.* 2022). However, in these systems, the SOFC must be matched with a gas turbine of comparable power, which leads to an increase in investment costs and significant energy losses in the combustion chamber and turbine, sometimes even exceeding the energy consumption of the SOFC itself (Eisavi *et al.* 2018; Tian *et al.* 2018). Apart from the gas turbine, the application research of SOFC combined cycles has hardly been deeply explored. Meanwhile, the research on compressed carbon dioxide energy storage has mainly focused on its own optimal design (Liu *et al.* 2019b; Cao *et al.* 2020; Chae and Lee 2022), as well as its ability to provide both thermal and electrical energy (Liu *et al.* 2019a; Hemmati *et al.* 2021; Zhang *et al.* 2022). The scheduling problem of CCES in the integrated energy system has also attracted attention: for example, research works (Safaei and Keith 2014; Duniam and Veeraragavan 2019; He *et al.* 2018). The common point of these studies is that the storage tank is regarded as a fixed boundary condition: its volume is determined according to the required storage duration, and then the power cycle is analyzed under this volume. However, in the combined solid oxide fuel cell (SOFC)-carbon dioxide (CO_2) system, the storage tank is not a passive container. The CO_2 inventory it contains determines the mass flow rate of the cycle within a specific emission period, and changes in the flow rate affect the heat absorbed by the heater per unit mass, the intake temperature of the expander, and thus the output power and the depth of SOFC flue gas cooling. Therefore, the capacity of the storage tank is transmitted throughout the system and cannot be separated from the operating point of the cycle. What is not yet clear is how the performance of the SOFC-CO_2 combined energy storage and power generation system responds to changes in the storage tank capacity, and where the actual limit of this response lies.

This study takes the storage tank capacity as the sole independent variable and uses the Ericsson cycle to construct a model of the full-load solid oxide fuel cell (SOFC) and the combined system based on the compressed CO_2 cycle. The two subsystems exchange waste heat to enable one system to absorb the heat discharged by the other. Under a fixed emission period of 2.5 hours and a charging period of 6 hours, five different storage tank capacities (50, 100, 150, 200, and 250 tons of CO_2) were examined, corresponding to a CO_2 flow range of 5.55 to 27.77 kilograms per second; the compressor pressure ratio remained at the design value of 1.8. For each capacity, the net output power of the CO_2 cycle, the power generation efficiency of the combined cycle, the utilization rate of the SOFC flue gas waste heat, and the temperature distribution of the main components were evaluated, and the influence of the storage tank size selection was discussed. The results show that the degree of benefit that can be brought by increasing the storage tank capacity, and at what capacity this benefit begins to saturate.

2. System description

The SOFC-compressed CO_2 combined cycle system can be seen as a combination of two power generation parts: a SOFC and a compressed CO_2 power generation. The actual CO_2 cycle is based on

the Ericsson cycle. The description of the ideal and actual CO_2 cycle is available in our former work (Zhang *et al.* 2025).

2.1. The thermodynamic model for CO_2 cycle

Due to the isothermal compression and expansion processes in the ideal Ericsson cycle cannot be achieved in the application, we replace the isothermal process with a two-stage compressor and a two-stage expander using intermediate cooling and intermediate heating to approximate the isothermal compression and expansion process in the Ericsson cycle. It achieves higher cycle efficiency. If the number of compression stages is more, it will be closer to the ideal isothermal process. However, the actual compression process cannot exceed four stages due to the cost of the compressor and other factors. The temperature entropy diagram is shown as Fig. 1.

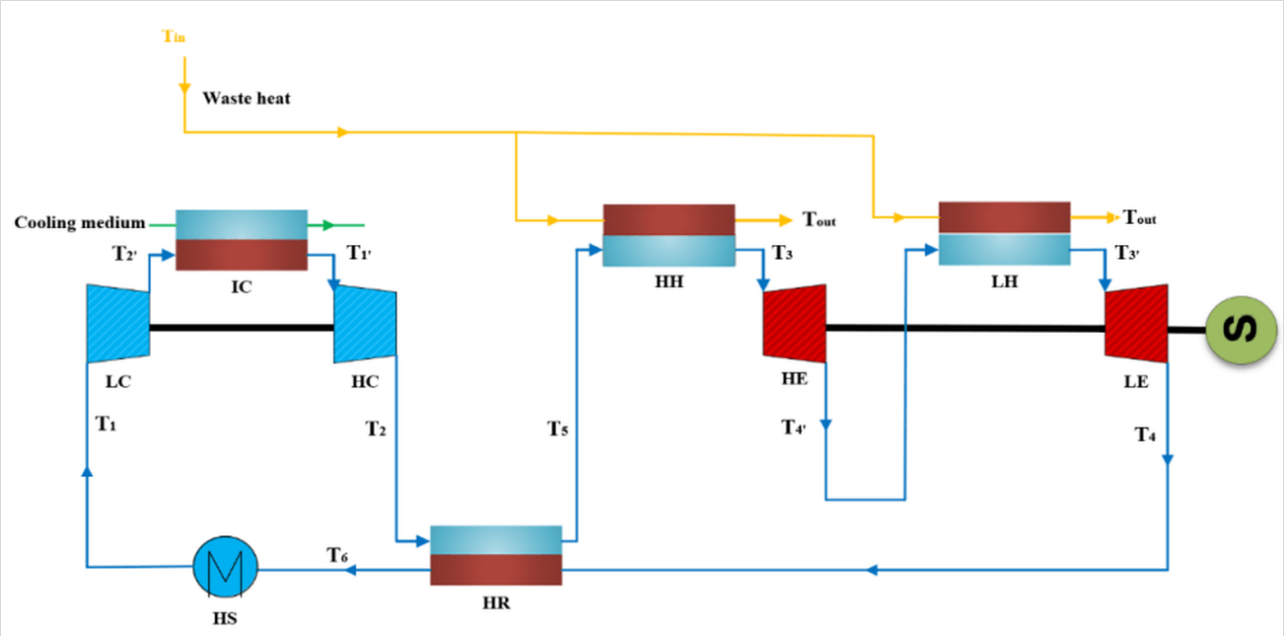

Figure 1. Schematic diagram of CO2 cycle system for waste heat utilization and power generation based on the approximate Ericsson cycle.

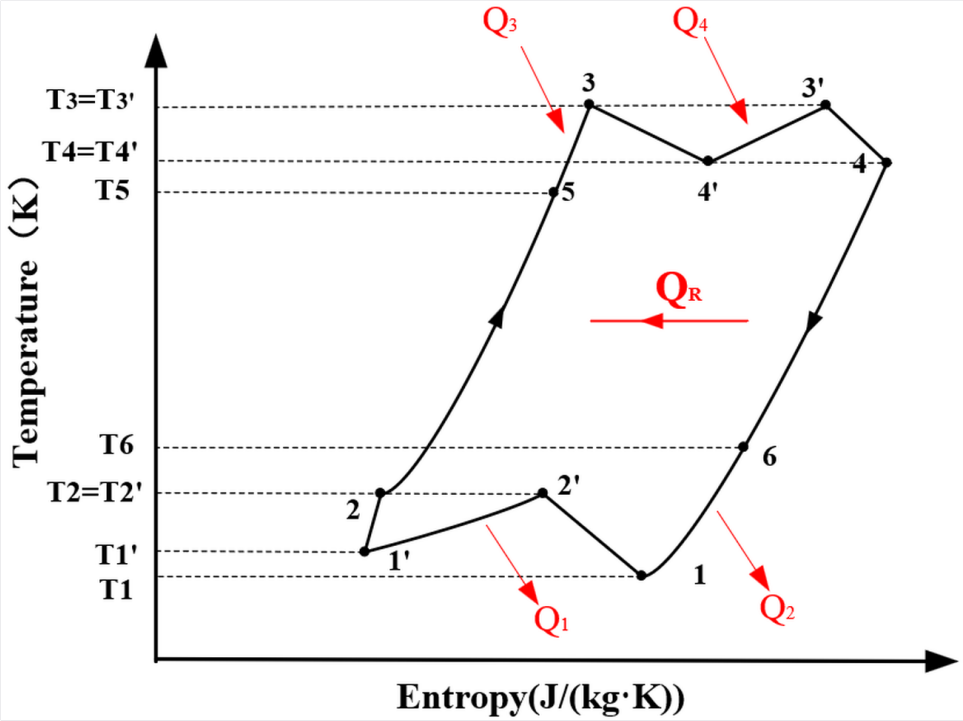

Figure 2. T-s diagram of CO2 cycle system.

In the ideal Ericsson cycle described above, the heat released from the high temperature source in isobaric process 4-1 is equal to the heat absorbed by the low temperature source in isobaric heat absorption 2-3. However, in the actual CO_2 circulation system, due to the reality of irreversible heat loss in the heat exchanger and other factors, the heat released outward in the actual process 4-1 cannot be fully absorbed by the cold source in 2-3, and this possible part of the heat is emitted to the environment, which is called Q_2. In the intermediate cooling process 2'-1', ideally, due to the cooling of the intermediate cooler, the inlet temperature of the LC should be the same as the inlet temperature of HC. However, the inlet temperature of the HC is slightly higher than the inlet temperature of the LC because the cooling medium of the IC is at ambient temperature, which cannot achieve sufficient cooling in the ideal condition. In the intermediate cooling process 2'-1', the heat release is called Q_1.

The power consumption of the two compressors with intermediate cooling can be calculated by:

$$W_C = W_{LC} + W_{HC} = \frac{n}{n-1} R_g T_1 \left[1 - \left(\frac{p_2}{p_1} \right)^{\frac{n-1}{n}} \right] + \frac{n}{n-1} R_g T_{1'} \left[1 - \left(\frac{p_3}{p_2} \right)^{\frac{n-1}{n}} \right] \quad (1)$$

In equation 1, the W_{LC} is the power required by LC and W_{HC} is the power required by HC. n is the multiplicity index. R_g is the gas constant. P_1 is LC inlet pressure, P_2 is LC outlet pressure as well as HC inlet pressure. P_3 is HC outlet pressure and the inlet pressure of HE

The external output power equation of the two expanders is calculated by:

$$W_P = W_{LE} + W_{HE} = \frac{1}{n-1} R_g T_3 \left[1 - \left(\frac{p_4}{p_3} \right)^{\frac{n-1}{n}} \right] + \frac{1}{n-1} R_g T_{3'} \left[1 - \left(\frac{p_1}{p_4} \right)^{\frac{n-1}{n}} \right] \quad (2)$$

where, the W_{LE} is the output work of LE, and W_{HE} is the output work of HE. P4 is the outlet pressure of HE.

The process of heat exchanged with the cooling medium in the intercooler is 2'-1' which can be calculated by:

$$Q_1 = \xi_{IC} C_{p,c} q_{m,c} (T_{2'} - T_{1'}) \tag{3}$$

where, the ζ_{IC} is the effectiveness of the intercooler. $q_{m,c}$ is the cooling medium's flow rate. $c_{p,c}$ is the specific heat capacity of cooling water. $T_{2'}$ is the outlet temperature of IC and $T_{1'}$ is the inlet temperature of IC.

Heat in the system provided by the waste heat flue gas is calculated by:

$$Q = Q_3 + Q_4 = \zeta_{HH} c_{p,g} q_{m,g} (T_{in} - T_{out}) \tag{4}$$

where, the ζ_{HH} is the effectiveness of heater. $c_{p,g}$ is the specific heat capacity at constant pressure of the flue gas. $q_{m,g}$ is the flow rate of the flue gas. T_{in} is the inlet temperature of the flue gas and T_{out} is the outlet temperature of the flue gas.

The heat exchange in the HR is calculated by:

$$Q_r = \zeta_{HR} c_{p,h} q_{m,h} (T_4 - T_6) \tag{5}$$

where, the $q_{m,h}$ is the CO_2 flow on the hot side. $c_{p,h}$ is hot side CO_2 specific heat capacity at constant pressure. T_4 is the hot side inlet temperature, and T_6 is the hot side outlet temperature.

Heat dissipated by the heat sink to the environment is Q_2 which can be calculated by:

$$Q_2 = \xi_{HS} C_{p,h} q_{m,h} (T_6 - T_1) \tag{6}$$

The formula for the whole waste heat of the flue gas is Q_S which can be written as:

$$Q_s = C_{p,g} q_{m,h} T_{in} \tag{7}$$

The $c_{p,\,g}$ is flue gas of specific heat capacity at constant pressure. It is necessary to determine the flue gas composition to calculate the specific heat capacity at constant pressure.

The efficiency of power generation for the CO_2 cycle system is η_{CO2} which can be calculated by:

$$\eta_{co_2} = \frac{(W_p - W_c)\eta_{ge}}{Q} \tag{8}$$

where, η_{ge} is the efficiency of the generator, $W_{net} = W_p$-Wc which is called net work.

The efficiency of CO_2 cycle power generation capacity contribution is written as:

$$\eta_{co_2} = \frac{(W_p - W_c)\eta_{ge}}{Q_{na}} \tag{9}$$

where, Q_{na} is the calorific value of natural gas.

2.2. SOFC-compressed CO_2 combined cycle system

In this work, to improve waste heat utilization and power generation efficiency, and long-term energy storage, a compressed CO_2 cycle is introduced to the SOFC based on the Ericsson cycle to form a new combined cycle system. The proposed SOFC-compressed CO_2 combined cycle system has

achieved the mutual and cascade utilization of waste heat between fuel cells and compressed CO_2 cycles. When the high-pressure and low-pressure storage tanks for CO_2 are adopted in the system, long-term energy storage can be achieved. In the low period of electricity consumption, the low temperature and low-pressure carbon dioxide in the low-pressure gas storage tank 13 is controlled to flow into the low-pressure compressor 1 and high-pressure compressor 2 by consuming the valley electricity or new energy power in the power grid. After rising to a certain pressure in the compressor 1, the CO_2 is cooled in the intercooler 3 with the incoming air, which is preheated for the SOFC, and then, the preheated air is further heated through the heat exchanger 6 with the flue gas that is from the high-pressure heater 7. Fully preheated air by the waste heat generated by the compressed CO_2 cycle enters SOFC 14 at last. The high temperature carbon dioxide at the exit of the high-pressure compressor 2 enters the high-pressure heat exchanger 4 for cooling before entering the high-pressure tank. The preheated air from the exchanger 4 is further heated in the heat exchanger 6, and then flow into the SOFC. The cooled carbon dioxide is stored in the high-pressure gas storage tank 5 through the first stop valve 15. During the peak period of power consumption, the high-pressure gas storage tank 5 will dynamically output CO_2 with need flow rate by the second flow control valve 18 according to the waste heat gas flow and temperature of the SOFC 14. The high temperature flue gas waste heat of the solid oxide fuel cell 14 will transfer heat to carbon dioxide through the high-pressure heater 8, so that the carbon dioxide temperature will rise to a set temperature. At the same time, carbon dioxide after working in the high-pressure expansion machine 9 is heated again in the low-pressure heater 7 by another part of the high temperature flue gas from the burning SOFC 14, so that the temperature rises again to the set temperature. The low-pressure expansion machine 10 works with the high-pressure expansion machine 9 simultaneously to drive the generator S. The waste heat of flue gas that is not fully utilized in the low-pressure heater 7 and high-pressure heater 8 is reused through the heat exchanger 6 to heat the inlet air of the solid oxide fuel cell 14. After the work is done from the low-pressure expander 10, the carbon dioxide comes out into the reheater 11, and transfers heat to the cold carbon dioxide before entering the high-pressure heater 8. The temperature of medium temperature carbon dioxide continues to decrease. The low temperature carbon dioxide from the reheater 11 enters the heat sink 12, and the carbon dioxide heat extracted from the heat sink 12 is transferred to the air for the solid oxide fuel cell 14 After cooling in heat sink 12, carbon dioxide passes through the second stop valve 16 and is sent to the low pressure gas storage tank 13. The system is illustrated in Figure 3. The CO_2 inventory held in the high-pressure and low-pressure storage tanks determines both the amount of energy stored and the flow rate at which the cycle operates during the peak period, and is therefore the design variable examined in this work.

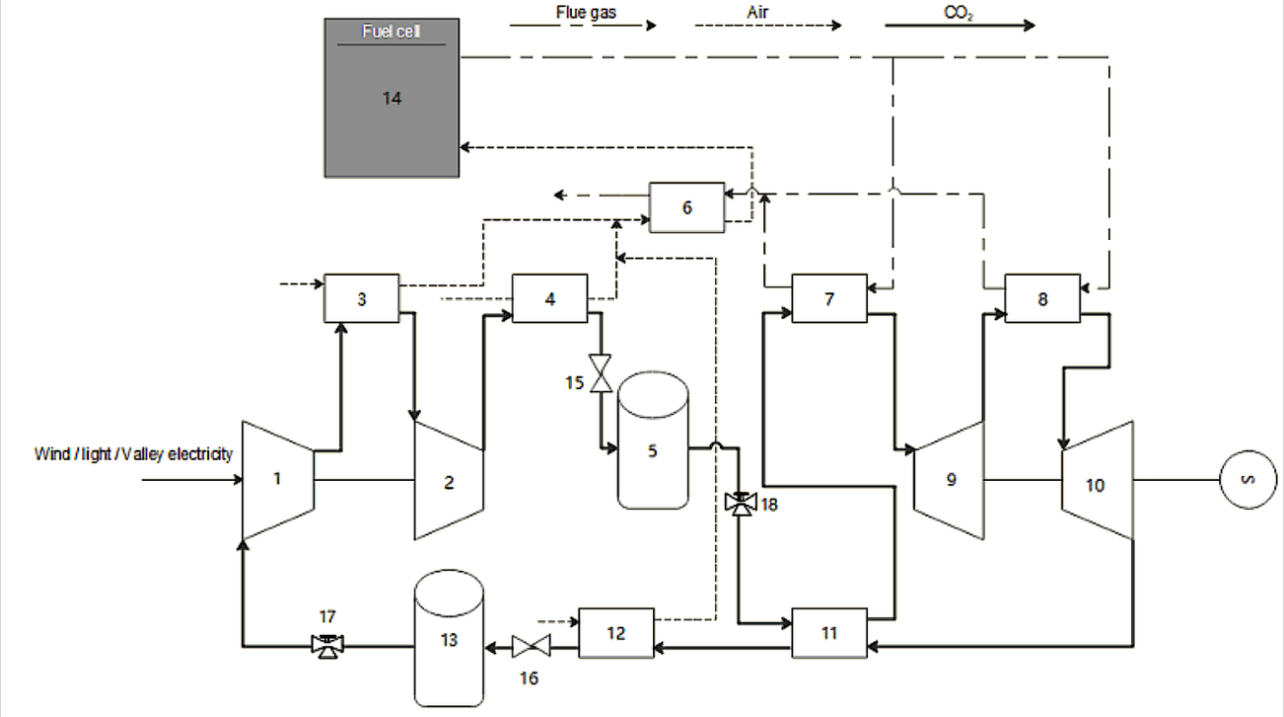

Figure 3. Schematic diagram of SOFC-compressed CO2 combined cycle system.

1: low-pressure compressor 2: high-pressure compressor 3: intercooler 4: high-pressure heat exchanger 5: high-pressure storage tank 6: heat exchanger (air heater) 7: high-pressure heater 8: low-pressure heater 9: high-pressure expander 10: low-pressure expander 11: return heat exchanger 12: heat sink 13: low-pressure storage tank 14: solid-oxide fuel cell 15: first shut-off valve 16: second shut-off valve 17: first flow control valve 18: second flow control valve.

The power generation efficiency of the SOFC-CO_2 cycle system can be calculated by,

$$\eta_{sofc-co_2} = \frac{(W_p - W_c) + W_{sofc}}{Q_{na}} \tag{10}$$

where, the W_{SOFC} is the Fuel cell power generation.

The utilization rate of flue gas waste heat from the SOFC is used to evaluate the utilization level of the system waste heat. It can be calculated by the following formula:

$$\eta_{fer} = \frac{Q_H}{Q_s} \tag{11}$$

3. Results and analysis

The influence of the storage tank capacity is analysed quantitatively for the proposed SOFC-compressed CO_2 combined cycle. Because the capacity of the tank and the flow rate of the working fluid are linked by the required discharge period, the capacity is varied at a constant discharge period and the resulting flow rate is used as the abscissa of the figures. The design parameters of the main components are listed in Table 1.

Table 1. Some parameters of the SOFC-CO2 combined cycle system for all calculation.

Parameters	Value
CO_2 flow rate	5.55-27.77 kg/s
CO_2 pressure ratio	1.2-2.0
Ambient temperature	25 °C
CO_2 inlet pressure	101.3 kPa
Cooling water temperature	20 °C
Cooling water flow	8000 kg·h^{-1}
Compressor efficiency	0.85
Expander efficiency	0.85
Intercooler effectiveness	0.85
Heater effectiveness	0.85
Generator efficiency	0.98
Rated power generation of fuel cells	905.91 kW
Temperature of flue gas	423.65-521.43 °C
Flow rate of flue gas	13.32-15.31 kg/s
Solid oxide fuel cell	28 PCS

3.1. Storage tank capacity and its coupling with the working fluid flow rate

The combined cycle is designed for a peak power release period of 2.5 h and a valley charging period of 6 h. The capacity of the CO_2 storage tanks is defined as the mass of CO_2 charged into the high-pressure tank and discharged during one peak period, so that $C_{st} = q_m \times t_{dis}$, where q_m is the CO_2 flow rate and t_{dis} = 2.5 h is the discharge period. The five capacities considered, 50, 100, 150, 200 and 250 t, therefore correspond to CO_2 flow rates of 5.55, 11.11, 16.66, 22.22 and 27.77 kg/s. Because the geometric volume of the tanks follows from the storage pressure and the density of CO_2 at that pressure and does not itself enter the thermodynamic calculation, the capacity is expressed as a mass throughout this paper.

All cases are calculated with identical boundary conditions apart from the capacity: the pressure ratio of each compressor in the CO_2 cycle is fixed at 1.8, the ambient temperature is 20 °C, the cooling water is supplied at 20 °C with a flow of 8000 kg/h, and the SOFC operates at full load with a rated power of 905.91 kW and a flue gas temperature of 423.65-521.43 °C. The SOFC side of the system is therefore invariant, and a change in tank capacity acts on the system through the CO_2 flow rate alone. The capacity is thus not a purely geometric parameter: it fixes the inventory of the working fluid and, at a constant discharge period, the flow rate at which the CO_2 cycle absorbs heat from the fuel cell exhaust and rejects heat to the environment.

3.2. Effect of storage tank capacity on the CO_2 cycle performance

Figure 4 shows the power generation efficiency of the CO_2 cycle, the power consumption of the compressors, the output power of the expanders, the net output power and the heat exchanged in the high-pressure and low-pressure heaters as a function of capacity. The net output power rises from 732 kW at 50 t to 3006 kW at 250 t, an increase of about 3.31 times, and the heat exchanged in HH and LH grows in proportion. The power generation efficiency of the CO_2 cycle moves in the opposite direction, decreasing slightly from 37.76% to 36.40% over the same range, so that it can be regarded as stable at approximately 37%. The compressor power increases almost linearly with capacity because the inlet temperature and pressure of the compressors do not change. The output power of the expanders does not grow at the same rate: at a constant SOFC load the temperature and flow rate of the flue gas are fixed, so as the CO_2 inventory becomes larger the heat absorbed per unit mass of CO_2 in the heaters decreases and the CO_2 temperature at the expander inlet falls. Beyond a capacity of

about 150 t, that is 16.7 kg/s, the growth rate of the expander output is visibly reduced. Since the heat exchanged in the heaters grows faster than the net cycle work, the efficiency of the CO_2 cycle declines marginally, and the additional capacity serves to store and pass on a larger quantity of heat rather than to raise the conversion efficiency of the CO_2 cycle itself.

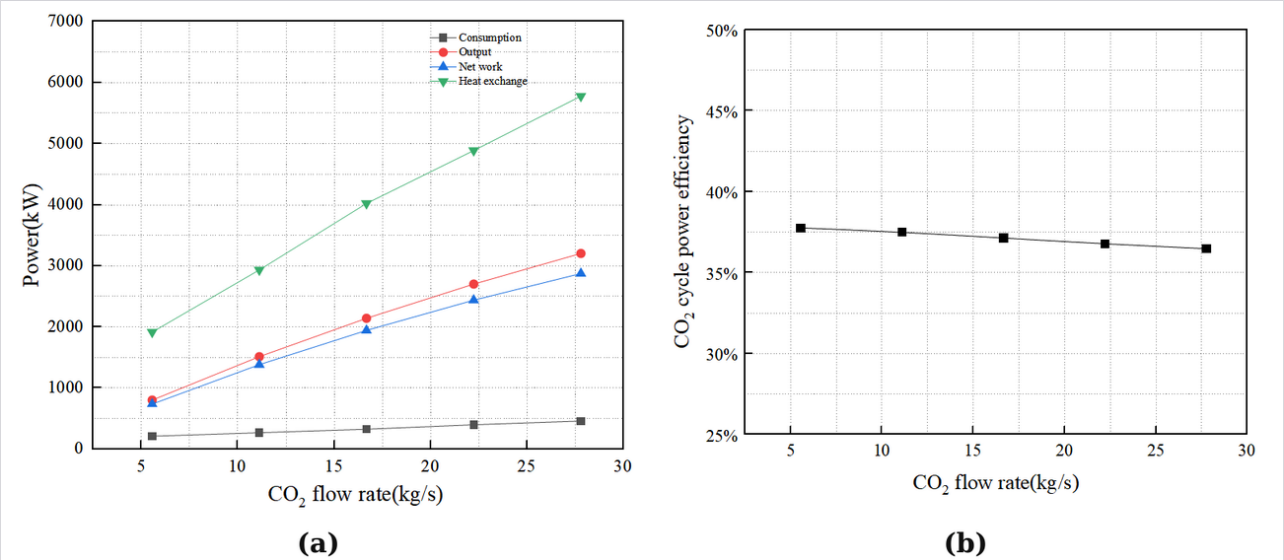

Figure 4. The power generation efficiency, the power consumption of compressors, the output power of expanders, net output power and the heat transfer of heaters of the CO_2 cycle system under different storage tank capacities, expressed as the CO_2 flow rate at a fixed discharge period of 2.5 h.

3.3. Effect on the combined cycle power generation efficiency and flue gas waste heat utilization

Figure 5(a) compares the power generation efficiency of the SOFC, of the CO_2 cycle and of the combined system for the five capacities. The efficiency of the SOFC is independent of the tank capacity because the fuel cell operates at full load, so the consumption of natural gas is constant. The power generation efficiency of the combined cycle increases monotonically from 66.12% at 50 t to 73.63% at 250 t, the net output power of the CO_2 cycle rising from 732 kW to 3006 kW over the same interval. At 250 t the combined efficiency exceeds that of the CO_2 cycle alone by about 37.18% and that of the SOFC alone by about 13.6%. The shape of the curve shows that the benefit of capacity decreases as the tank becomes larger: the flue gas heat that the CO_2 cycle can absorb is bounded by the fixed exhaust of the full-load SOFC, so an increasing inventory absorbs a diminishing additional fraction of that heat and the combined efficiency approaches an upper limit set by the flue gas enthalpy. Figure 5(b) shows the corresponding utilization rate of the flue gas energy, which rises from 11.8% at 50 t to 34.5% at 250 t. The slope falls at the upper end of the range for the same reason, and even at the largest capacity considered about two thirds of the flue gas heat is still discharged with the exhaust.

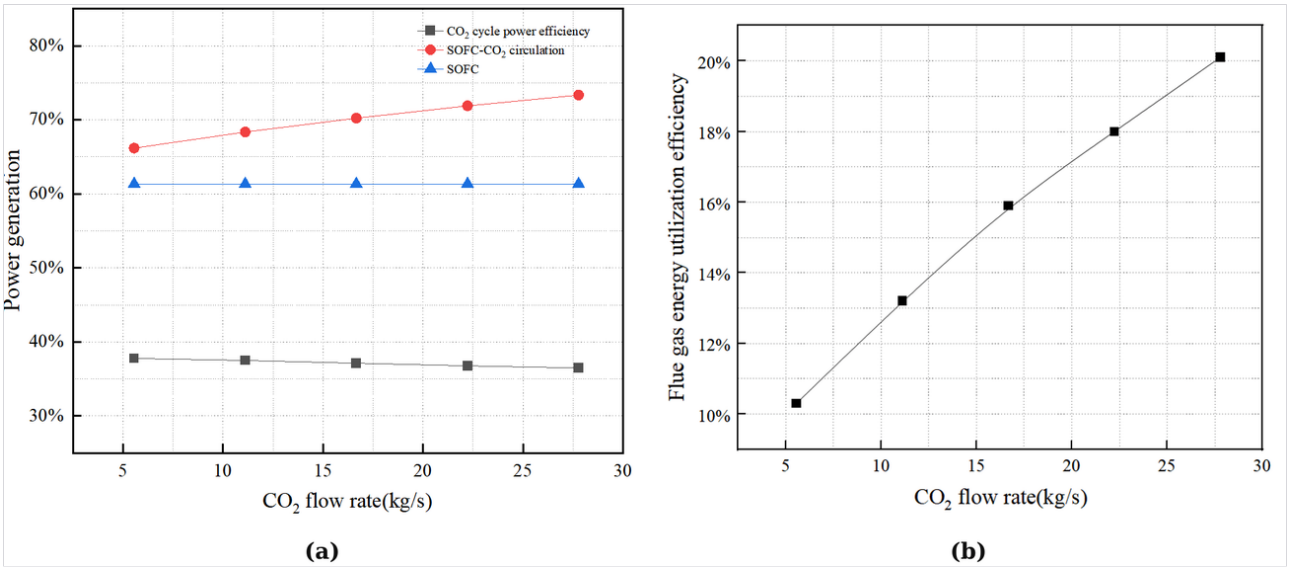

Figure 5. The power generation efficiency (a) and the utilization efficiency of flue gas energy (b) of the SOFC-compressed CO_2 combined cycle under different storage tank capacities.

4. Conclusion

(1) The effect of storage tank capacity on a solid oxide fuel cell (SOFC)-CO_2 combined cycle energy storage and power generation system has been analysed. The capacity of the tank fixes the CO_2 inventory and, at a fixed discharge period of 2.5 h, the flow rate of the CO_2 cycle, so that capacities of 50, 100, 150, 200 and 250 t correspond to CO_2 flow rates of 5.55, 11.11, 16.66, 22.22 and 27.77 kg/s. With the compressor pressure ratio fixed at 1.8 and the SOFC at full load, the capacity is the only variable of the study.

(2) Increasing the capacity from 50 t to 250 t raises the net output power of the CO_2 cycle from 732 kW to 3006 kW, about 3.31 times, and the electricity delivered during the 2.5 h peak period from about 1.8 MWh to 7.5 MWh. The power generation efficiency of the CO_2 cycle remains at approximately 37%, decreasing only from 37.76% to 36.40%, because the heat absorbed per unit mass of CO_2 falls as the inventory grows at a fixed supply of flue gas heat.

(3) The power generation efficiency of the combined cycle rises from 66.12% to 73.63% and the utilization rate of the SOFC flue gas waste heat from 11.8% to 34.5% as the capacity increases from 50 t to 250 t. The improvement originates from a better match between the fixed flue gas heat and the larger CO_2 inventory, the heater outlet temperatures falling and the flue gas being cooled more deeply, rather than from an improvement of the CO_2 cycle itself.

Declarations

Author contributions. Tianxiang Wang: Writing (original draft), Data curation, Formal analysis, Investigation, Methodology, Conceptualization.

Funding. This research received no specific funding.

Conflicts of interest. The authors declare no competing interests.

Data availability. The data that support the findings of this study are available from the corresponding author upon reasonable request.

References

Cao, Zheng; Deng, Jianqiang; Zhou, Shenghui; He, Yang (2020) 'Research on the feasibility of compressed carbon dioxide energy storage system with underground sequestration in antiquated mine goaf', *Energy Conversion and Management*, 211, pp. 112788. Available at: https://doi.org/10.1016/j.enconman.2020.112788

Chae, Yong Jae; Lee, Jeong Ik (2022) 'Thermodynamic analysis of compressed and liquid carbon dioxide energy storage system integrated with steam cycle for flexible operation of thermal power plant', *Energy Conversion and Management*, 256, pp. 115374. Available at: https://doi.org/10.1016/j.enconman.2022.115374

Cormos, Calin-Cristian (2012) 'Hydrogen and power co-generation based on coal and biomass/solid wastes co-gasification with carbon capture and storage', *International Journal of Hydrogen Energy*, 37(7), pp. 5637-5648. Available at: https://doi.org/10.1016/j.ijhydene.2011.12.132

Duniam, Sam; Veeraragavan, Ananthanarayanan (2019) 'Off-design performance of the supercritical carbon dioxide recompression Brayton cycle with NDDCT cooling for concentrating solar power', *Energy*, 187, pp. 115992. Available at: https://doi.org/10.1016/j.energy.2019.115992

Eisavi, Beneta; Chitsaz, Ata; Hosseinpour, Javad; Ranjbar, Faramarz (2018) 'Thermo-environmental and economic comparison of three different arrangements of solid oxide fuel cell-gas turbine (SOFC-GT) hybrid systems', *Energy Conversion and Management*, 168, pp. 343-356. Available at: https://doi.org/10.1016/j.enconman.2018.04.088

Golding, E.W. (1976) *The generation of electricity by wind power*. London: E. & F. N. Spon.

Hayat, Muhammad Badar; Ali, Danish; Monyake, Keitumetse Cathrine; Alagha, Lana; Ahmed, Niaz (2019) 'Solar energy-A look into power generation, challenges, and a solar-powered future', *International Journal of Energy Research*, 43(3), pp. 1049-1067. Available at: https://doi.org/10.1002/er.4252

He, Yang; Chen, Haisheng; Xu, Yujie; Deng, Jianqiang (2018) 'Compression performance optimization considering variable charge pressure in an adiabatic compressed air energy storage system', *Energy*, 165, pp. 349-359. Available at: https://doi.org/10.1016/j.energy.2018.09.168

Hemmati, Mohammad; Mohammadi-Ivatloo, Behnam; Abapour, Mehdi; Shafiee, Mahmoud (2021) 'Thermodynamic modeling of compressed air energy storage for energy and reserve markets', *Applied Thermal Engineering*, 193, pp. 116948. Available at: https://doi.org/10.1016/j.applthermaleng.2021.116948

Huang, Shanglong; Yang, Chen; Chen, Hao; Zhou, Nana; Tucker, David (2022) 'Coupling impacts of SOFC operating temperature and fuel utilization on system net efficiency in natural gas hybrid SOFC/GT system', *Case Studies in Thermal Engineering*, 31, pp. 101868. Available at: https://doi.org/10.1016/j.csite.2022.101868

Kanoglu, Mehmet; Dincer, Ibrahim; Rosen, Marc A. (2007) 'Understanding energy and exergy efficiencies for improved energy management in power plants', *Energy Policy*, 35(7), pp. 3967-3978. Available at: https://doi.org/10.1016/j.enpol.2007.01.015

Liu, Zhan; Liu, Bin; Guo, Jianzhang; Xin, Xuan; Yang, Xiaohu (2019a) 'Conventional and advanced exergy analysis of a novel transcritical compressed carbon dioxide energy storage system', *Energy Conversion and Management*, 198, pp. 111807. Available at: https://doi.org/10.1016/j.enconman.2019.111807

Liu, Zhan; Cao, Feng; Guo, Jianzhang; Liu, Jie; Zhai, Hongyan; Duan, Zhenya (2019b) 'Performance analysis of a novel combined cooling, heating and power system based on carbon dioxide energy storage', *Energy Conversion and Management*, 188, pp. 151-161. Available at: https://doi.org/10.1016/j.enconman.2019.03.031

Safaei, Hossein; Keith, David W. (2014) 'Compressed air energy storage with waste heat export: An Alberta case study', *Energy Conversion and Management*, 78, pp. 114-124. Available at: https://doi.org/10.1016/j.enconman.2013.10.043

Shamoushaki, Moein; Ehyaei, M.A.; Ghanatir, Farrokh (2017) 'Exergy, economic and environmental analysis and multi-objective optimization of a SOFC-GT power plant', *Energy*, 134, pp. 515-531. Available at: https://doi.org/10.1016/j.energy.2017.06.058

Singh, G.K. (2013) 'Solar power generation by PV (photovoltaic) technology: A review', *Energy*, 53, pp. 1-13. Available at: https://doi.org/10.1016/j.energy.2013.02.057

Tian, Minli; Yu, Zeting; Zhao, Hongxia; Yin, Jiqiang (2018) 'Thermodynamic analysis of an integrated solid oxide fuel cell, Organic Rankine Cycle and absorption chiller trigeneration system with CO2 capture', *Energy Conversion and Management*, 171, pp. 350-360. Available at: https://doi.org/10.1016/j.enconman.2018.05.108

Toledo, Olga Moraes; Oliveira Filho, Delly; Diniz, Antônia Sônia Alves Cardoso (2010) 'Distributed photovoltaic generation and energy storage systems: A review', *Renewable and Sustainable Energy Reviews*, 14(1), pp. 506-511. Available at: https://doi.org/10.1016/j.rser.2009.08.007

Vargas, Soraida Aguilar; Esteves, Gheisa Roberta Telles; Maçaira, Paula Medina; Bastos, Bruno Quaresma; Cyrino Oliveira, Fernando Luiz; Souza, Reinaldo Castro (2019) 'Wind power generation: A review and a research agenda', *Journal of Cleaner Production*, 218, pp. 850-870. Available at: https://doi.org/10.1016/j.jclepro.2019.02.015

Zhang, Tongjun (2020) 'Methods of Improving the Efficiency of Thermal Power Plants', *Journal of Physics: Conference Series*, 1449(1), pp. 012001. Available at: https://doi.org/10.1088/1742-6596/1449/1/012001

Zhang, Yuan; Lin, Yiheng; Lin, Fangzi; Yang, Ke (2022) 'Thermodynamic analysis of a novel combined cooling, heating, and power system consisting of wind energy and transcritical compressed CO2 energy storage', *Energy Conversion and Management*, 260, pp. 115609. Available at: https://doi.org/10.1016/j.enconman.2022.115609

Zhang, Jingkui; Yan, Wen; Fan, Yi; Cui, He; Song, Xiaona; Zhang, Jiakai (2025) 'Research on power generation and waste heat utilization performance of a novel gas-CO2 combined cycle', *Energy*, 321, pp. 134954. Available at: https://doi.org/10.1016/j.energy.2025.134954

HOW TO CITE THIS PAPER

Wang, T. (2026). The effect of storage tank capacity on a solid oxide fuel cell (SOFC)–compressed CO2 energy storage (CCES) combined cycle energy storage and power generation system. In: *Proceedings of the 22nd International Conference on Sustainable Energy Technologies (SET2026)*, Kuala Lumpur, Malaysia, 13 to 15 August 2026. Caravel Press, pp. 134–146. ISBN 978-1-995850-00-9. ISSN 2978-4387. https://doi.org/10.65582/set.2026.011

COPYRIGHT AND LICENCE

© 2026 The Author(s). This is an open access paper distributed under the terms of the Creative Commons Attribution (CC BY 4.0) licence, which permits unrestricted use, distribution and reproduction in any medium, provided the original work is properly cited.

WSSET World Society of Sustainable Energy Technologies Organised by the World Society of Sustainable Energy Technologies. Published by Caravel Press.