22nd International Conference on Sustainable Energy Technologies
Kuala Lumpur, Malaysia, 13 to 15 August 2026 · ISBN 978-1-995850-00-9 · ISSN 2978-4387

CONFERENCE PAPER · ENERGY STORAGE & CONVERSION

Investigation of a Liquid Piston Air Compressor for Near-Isothermal Compression and Enhanced Energy Efficiency: Experimental evaluation of a benchtop water-piston unit for compressed air energy storage

Krisnan K[1]*, Vijayamohan Mankayakarasi Brathikan[1], Janarthanan Venkatachalam[2], Sangeetha N[1]

[1] REACT, Kumaraguru Institutions, Coimbatore, India
[2] Kinowave, Coimbatore, India

RECEIVED 1 July 2026 · REVISED 13 July 2026 · ACCEPTED 19 July 2026
PRESENTED 13 to 15 August 2026 · PUBLISHED 23 November 2026

ABSTRACT

Compressed air energy storage (CAES) can store surplus renewable electricity at grid scale, but the heat generated while the air is compressed lowers its efficiency, and established plants depend on fuel combustion and heat management hardware to compensate. This study presented the design, fabrication and experimental evaluation of a benchtop liquid piston air compressor in which water replaced the solid piston. The unit consisted of two interconnected stroke tanks, each half filled with water, a diaphragm pump and four solenoid valves that moved water alternately between the tanks, so that the water column displaced and compressed the trapped air. An microcontroller, driven by liquid level sensors, switched the valves, while a pressure transducer and a thermocouple monitored the air pressure and temperature in the storage tank. The relationship between pressure and temperature was recorded from 0.5 bar to approximately 4.4 bar for a conventional CAES configuration and for the water-assisted configuration. In the conventional configuration, the temperature rose progressively from 29.75 °C to 36.75 °C, an increase of 7.0 °C. In the water-assisted configuration, the temperature rose from 29.25 °C to 30.75 °C, an increase of 1.5 °C, so that the temperature rise was about 79% smaller and the final temperature was 6.0 °C lower. These results indicate that the water piston suppressed the temperature rise during compression without a separate heat exchanger. A theoretical analysis showed that the isothermal efficiency of adiabatic compression falls as the volume ratio decreases, which supports the use of a near-isothermal process. The temperature rise was used as an indicator of heat loss, and energy consumption and round-trip efficiency were not measured. The main limitation identified was that near-isothermal compression required a longer stroke time and delivered less air per stroke. The study therefore established the thermal advantage of water-assisted compression at benchtop scale and identified liquid piston velocity, energy measurement and pilot-scale testing as the next steps.

KEYWORDS Liquid piston air compressor, Near-isothermal compression, Thermal management, Compression efficiency, Sustainability

1. Introduction

The growth of variable renewable generation has increased the need for storage that can absorb surplus electricity and return it when demand rises (Evans *et al.* 2012). Pumped hydroelectric storage is the dominant grid-scale option, but its deployment depends on suitable topography and reservoir sites (Barbour *et al.* 2016). Compressed air energy storage (CAES) is an alternative in which surplus electricity drives a compressor, the air is held at high pressure in a cavern or vessel, and the stored air later drives a turbine and generator (Budt *et al.* 2016; Wang *et al.* 2017).

* Corresponding author. Email address: notifykrisnan@gmail.com (Krisnan K)

© 2026 The Author(s).
Published by Caravel Press.

doi.org/10.65582/set.2026.016

Two CAES plants have operated commercially at large scale: Huntorf in Germany, commissioned in 1978 with a rated output of 290 MW, and McIntosh in the USA, commissioned in 1991 with a rated output of 110 MW (Budt *et al.* 2016). Huntorf stores its air in two salt caverns (Crotogino *et al.* 2001; Raju and Khaitan 2012). Both plants burn natural gas to heat the air before expansion, and their round-trip efficiencies of approximately 42% and 54% respectively were reported as modest (Budt *et al.* 2016; Wang *et al.* 2017). A principal cause is the heat produced during compression: in the existing plants, the largest energy loss was reported to occur where the compressed air is cooled between compression stages (Kaiser *et al.* 2018: 144). Adiabatic CAES retains this heat in a thermal store and returns it to the air before expansion, which removes the fuel but adds thermal storage and insulation hardware (Luo *et al.* 2016). The same problem affects industrial compressed air systems, in which only 10–20% of the electricity supplied to the compressor was reported to be used effectively, the remainder being lost through leakage and heat (Broniszewski and Werle 2018).

Near-isothermal compression reduces the work required because heat is removed while the air is being compressed. A liquid piston achieves this by replacing the solid piston with a liquid column that conforms to the chamber and provides a large contact area with the gas. A simulation of a liquid piston compressor at a pressure ratio of 9.5:1 predicted 19% lower energy consumption and a total efficiency of 83%, compared with 70% for a reciprocating piston (Van de Ven and Li 2009: 2183). Porous inserts were later introduced into liquid piston chambers to increase the heat transfer area (Yan *et al.* 2015: 40) and were tested at pressures between 7 and 210 bar (Wieberdink *et al.* 2018: 1025). Droplet spray cooling has been studied in liquid piston compression (Qin and Loth 2014: 539), and water droplet injection in a near-isothermal expander increased the specific work by 15.7% compared with adiabatic expansion (Zhang *et al.* 2018). A near-isothermal storage system combining hydraulic machines, spray cooling and waste heat use was predicted to reach a round-trip efficiency of 82% (Odukomaiya *et al.* 2016: 948).

Most of these studies relied on heat transfer enhancement hardware or on simulation. The present work examined the simplest form of the concept, a plain water piston in a low-cost benchtop unit without inserts, sprays or heat exchangers, and compared its temperature response with that of a conventional CAES configuration over the same pressure range. The objectives were to (i) design and fabricate a two-tank liquid piston compressor with automatic valve control, (ii) measure the relationship between pressure and temperature during compression for both configurations, and (iii) discuss the thermodynamic trade-off that near-isothermal compression introduces.

2. Theoretical background

Compressing a fixed amount of air from volume V_1 to V_2 requires the least work if the air is held at constant temperature and the most if no heat leaves the air (Çengel and Boles 2015). For an ideal gas, the work of reversible isothermal compression is given by Equation 1 and the work of reversible adiabatic compression by Equation 2. The isothermal efficiency, defined here as the ratio of the two, is given by Equation 3.

$$W_{\mathrm{iso}} = nRT_1 \ln \frac{V_1}{V_2} \tag{1}$$

$$W_{\mathrm{ad}} = \frac{nRT_1}{\gamma - 1}\left[\left(\frac{V_1}{V_2}\right)^{\gamma-1} - 1\right] \tag{2}$$

$$\eta_{\mathrm{iso}} = \frac{W_{\mathrm{iso}}}{W_{\mathrm{ad}}} \times 100 \tag{3}$$

Where:

- W_{iso} and W_{ad} = work of isothermal and adiabatic compression (J)
- n = amount of air (mol)
- R = universal gas constant (8.314 J/mol K)
- T_1 = initial air temperature (K)
- V_1 and V_2 = initial and final volumes of the air (m^3)
- γ = ratio of specific heats (1.4 for air)
- η_{iso} = isothermal efficiency (%)

Figure 1 shows Equation 3 for air. The isothermal efficiency of adiabatic compression fell from 87% at a volume ratio V_2/V_1 of 0.5 to 61% at a volume ratio of 0.1, which means that the proportion of the work that is wasted as heat grows as the air is compressed further. Real compressors lie between the two limits and follow the relation PV^n = constant, with $1 < n < \gamma$. The purpose of the liquid piston is to bring n towards unity by keeping the air in contact with a large mass of water, which absorbs the heat as it is released. Water is suited to this role because its specific heat capacity, about 4.2 kJ/kg °C, is roughly four times that of air on a mass basis (Çengel and Boles 2015). A lower air temperature also has a practical benefit for storage: at a given pressure and tank volume, the ideal gas law shows that cooler air is denser, so a larger mass of air is stored and less pressure is lost when the air later cools to ambient temperature.

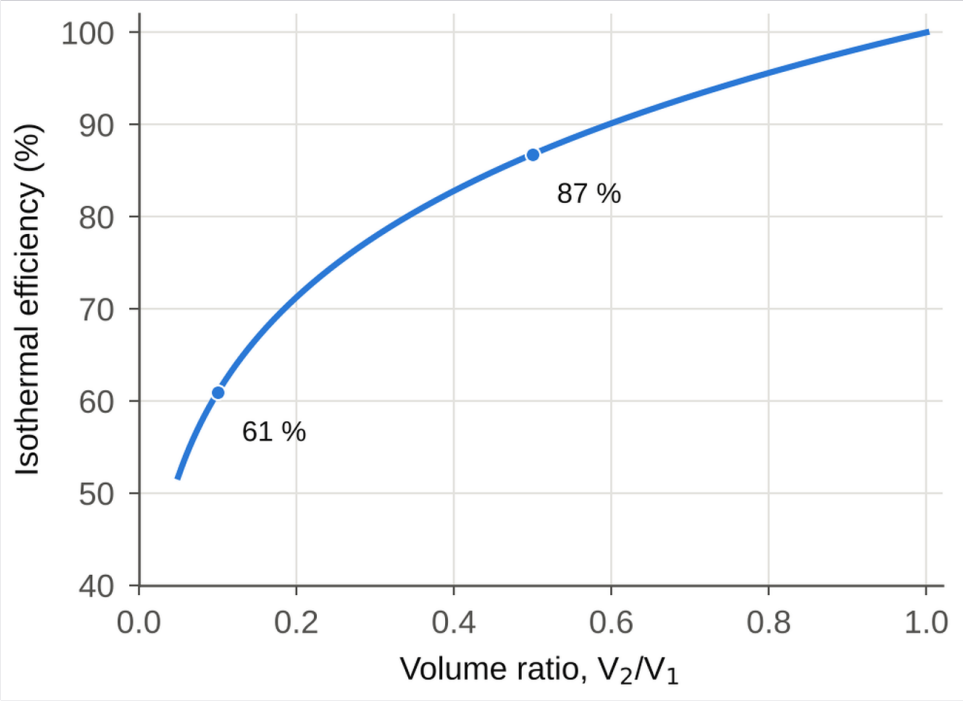

Figure 1. Isothermal efficiency of adiabatic compression of air as a function of volume ratio, calculated from Equations 1 to 3 with γ = 1.4.

3. Experimental system and method

3.1. System description

The LP-CAES unit consisted of two stroke tanks, each filled halfway with water, a compressed air storage tank, a diaphragm water pump and four solenoid valves (Figures 2 and 3). The three-dimensional model in Figure 2(a) shows the intended arrangement, and Figure 2(b) shows the fabricated benchtop rig. The pump had a flow rate of 4 l/min and worked as a one-way pump

connected to the stroke tanks through the solenoid valves. Each stroke tank had three openings, as shown in Figure 3. Openings 3 and 4 were interconnected through the pump for water transfer between the tanks, openings 2 and 5 were connected to the storage tank, and openings 1 and 6 drew air from the atmosphere.

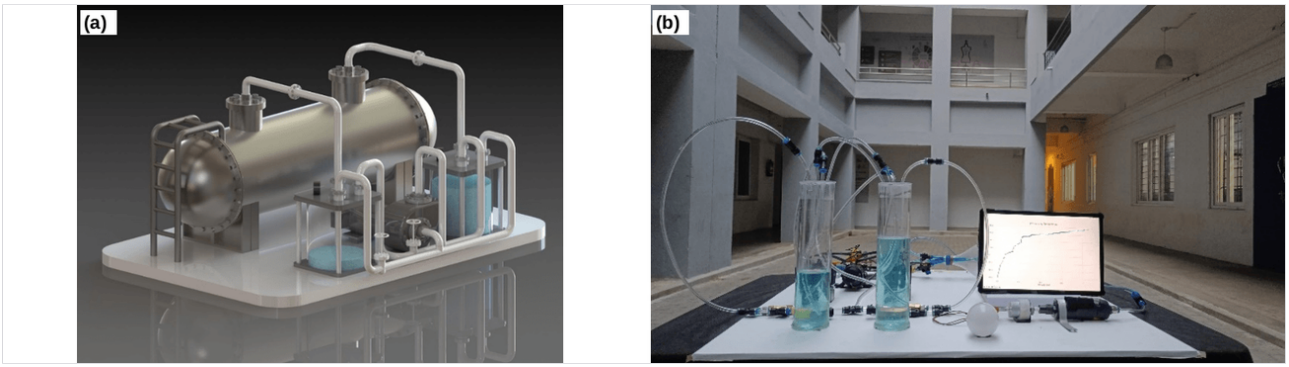

Figure 2. The LP-CAES benchtop unit: (a) three-dimensional model and (b) fabricated experimental rig.

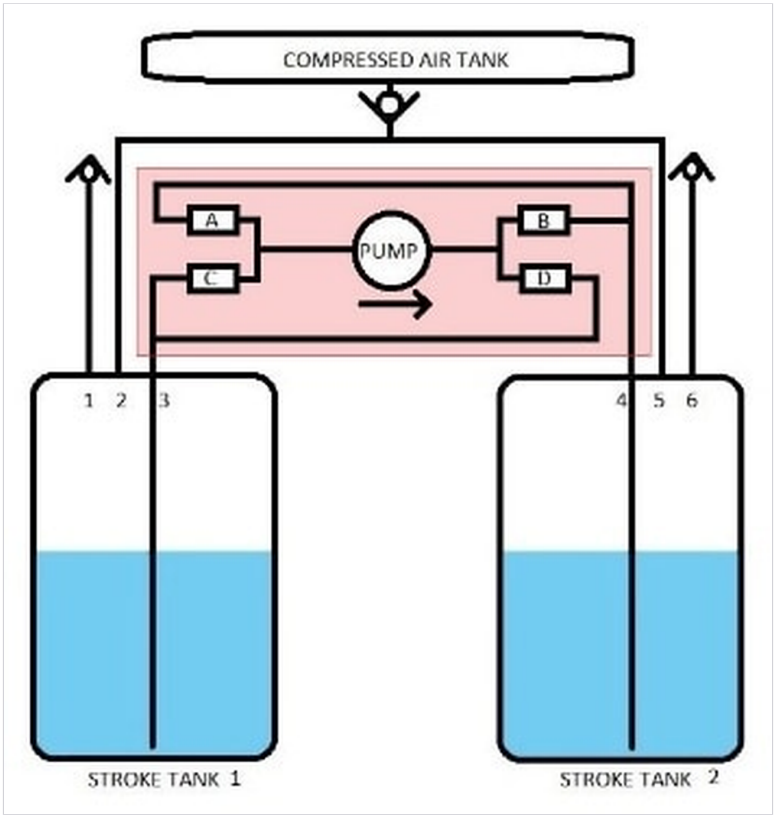

Figure 3. Schematic of the LP-CAES unit showing the two stroke tanks, the water pump with its solenoid valves and the compressed air tank.

When the system was started, the pump moved water from the first stroke tank (Tank A) to the second (Tank B) while air was drawn into Tank A from the atmosphere. The rising water in Tank B displaced and compressed the air above it, and the compressed air was pushed through a unidirectional pneumatic tube into the storage tank. Reversing the valve states reversed the water flow, so that the roles of the two tanks alternated in successive strokes and air was delivered to the storage tank on every stroke. In an energy storage application, the pump would be driven by surplus or off-peak electricity, and the stored air would later drive a turbine to meet peak demand.

3.2. Instrumentation and control

The control system consisted of an STM32 microcontroller, four solenoid valves, trigger relays, liquid level sensors in the stroke tanks, a pressure transducer and a temperature sensor (Figure 4). The microcontroller processed the signals of the level sensors, which defined the stroke length, and used the relays to switch the solenoid valves in pairs. The valve states for the two flow directions are given in Table 1, where 1 indicates an energised valve and 0 a de-energised valve. The pressure transducer measured the air pressure in the storage tank over a range of 0–1.2 MPa with a 5 VDC supply, a 0.5–4.5 VDC output and an accuracy of 1% of full scale (equivalent to ±12 kPa). The air temperature in the storage tank was monitored by a thermocouple-based temperature sensor with an operating voltage of 3–5.5 VDC, a measuring range of 0 to +1024 °C and cold junction compensation from −20 to +80 °C. The pressure–temperature record was displayed on a monitor during operation (Figure 2(b)).

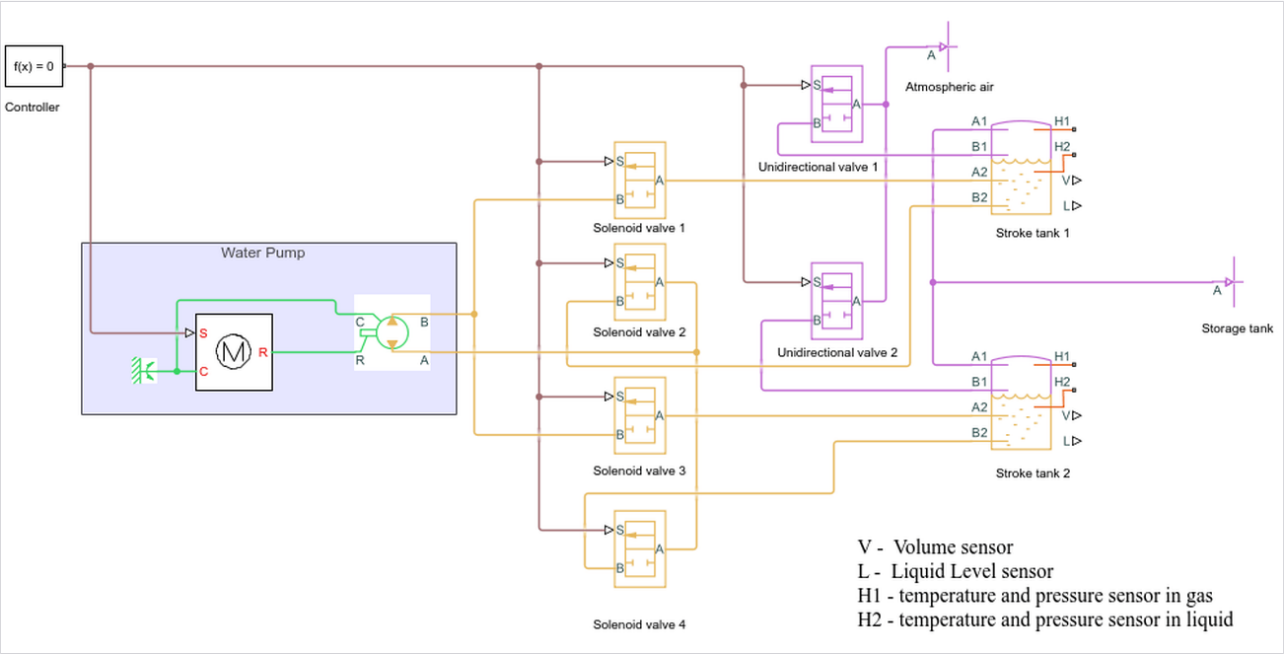

Figure 4. Control and instrumentation circuit of the LP-CAES unit (V: volume sensor; L: liquid level sensor; H1: temperature and pressure sensor in the gas; H2: temperature and pressure sensor in the liquid).

Table 1. ON and OFF states of the solenoid valves (1 = ON, 0 = OFF).

Flow direction	Valve 1	Valve 2	Valve 3	Valve 4
Tank A to Tank B	1	0	1	0
Tank B to Tank A	0	1	0	1

3.3. Test procedure and data

Pressure and temperature were recorded together while the storage tank pressure rose from 0.5 bar to approximately 4.4 bar, for the conventional CAES configuration, in which the air was compressed without the water piston, and for the water-assisted LP-CAES configuration. The two configurations were compared at matched pressures across the full range so that the effect of the water piston on heat generation could be isolated. Twenty pressure–temperature pairs were available for each configuration (Table 2); the data were originally recorded in an undergraduate project at Kumaraguru College of Technology (Sivakeerthana, 2023) and were re-analysed in the present study. Temperatures were recorded in increments of 0.25 °C. The temperature rise was calculated as the difference between the temperatures at the lowest and highest pressures and was used as the indicator of the heat generated during compression. A linear regression of temperature on pressure was used to compare the rate of temperature increase of the two configurations.

Table 2. Pressure (P) and temperature (T) recorded for the conventional CAES and LP-CAES configurations.

Conventional CAES		LP-CAES		Conventional CAES		LP-CAES	
P (bar)	T (°C)	P (bar)	T (°C)	P (bar)	T (°C)	P (bar)	T (°C)
0.50	29.75	0.50	29.25	1.25	30.50	1.25	30.00
0.57	29.75	0.57	29.50	1.37	31.00	1.37	30.25
0.61	29.75	0.61	29.50	1.47	31.00	1.47	30.25
0.71	29.75	0.71	29.75	1.51	31.50	1.49	30.25
0.77	29.75	0.77	29.75	2.03	32.25	2.01	30.25
0.85	30.25	0.85	29.75	2.52	33.75	2.50	30.25
0.92	30.25	0.92	29.75	3.06	34.50	3.00	30.25
1.00	30.50	1.00	30.00	3.49	35.75	3.51	30.50
1.06	30.50	1.06	30.00	4.01	36.25	4.01	30.50
1.18	30.50	1.18	30.00	4.44	36.75	4.34	30.75

4. Results and discussion

4.1. Temperature response

Table 2 lists the recorded data and Figure 5 plots them. In the conventional configuration, the temperature increased progressively with pressure, from 29.75 °C at 0.5 bar to 36.75 °C at 4.44 bar, a rise of 7.0 °C. A linear fit gave a slope of 1.95 °C/bar ($R^2 = 0.99$), so the increase was close to linear over the range tested. In the LP-CAES configuration, the temperature increased from 29.25 °C at 0.5 bar to 30.75 °C at 4.34 bar, a rise of 1.5 °C, and remained at 30.25 °C between 1.37 and 3.00 bar. The fitted slope was 0.28 °C/bar. The temperature rise of the water-assisted unit was therefore about 79% smaller than that of the conventional configuration.

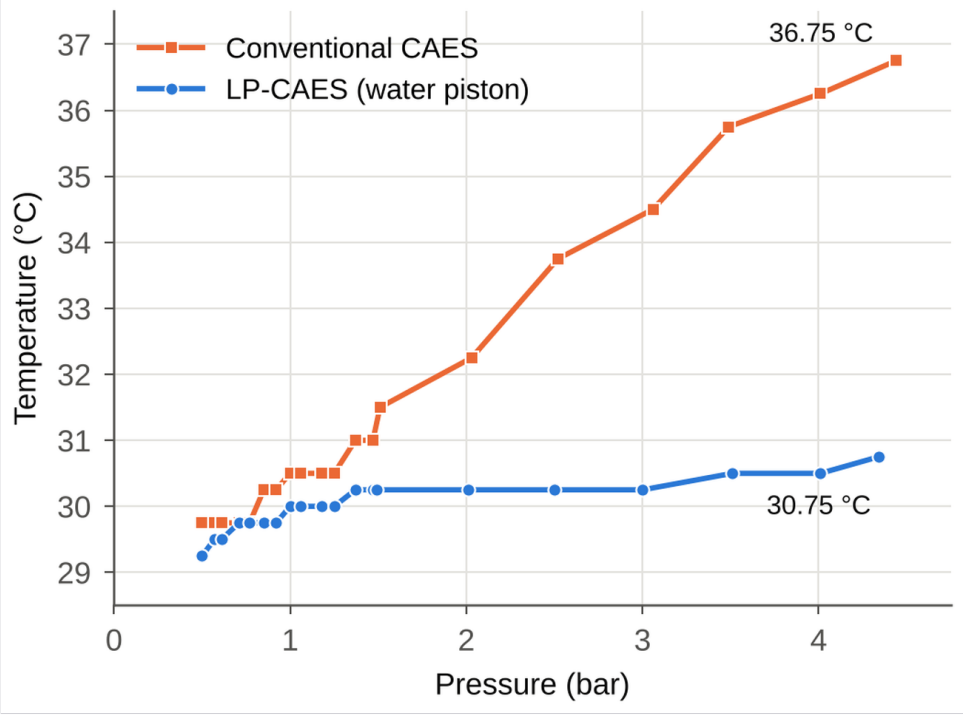

Figure 5. Temperature against pressure for the conventional CAES and LP-CAES (water piston) configurations.

The difference between the two configurations grew with pressure. It was 0.5 °C or less below 1 bar, about 4.2 °C at 3 bar and 5.8 °C at 4 bar, when the conventional temperature was interpolated to the pressures of the LP-CAES record. At the end of the test, the air in the LP-CAES unit was 6.0 °C cooler than in the conventional configuration (30.75 °C against 36.75 °C). Because the LP-CAES record began 0.5 °C cooler, the difference in temperature rise (5.5 °C) was slightly smaller than the difference in final temperature, and the comparison is therefore based on the rise rather than on the absolute temperature. The water piston had its largest effect at the higher pressures, where the heat generation was greatest.

4.2. Interpretation and limitations

The behaviour was consistent with the principle of the liquid piston: because the water was in continuous contact with the air, heat could pass into the water as it was generated, and the air temperature stayed close to its initial value. This agrees in direction with simulations showing that a liquid piston reduces the energy needed for compression (Van de Ven and Li 2009: 2183), although a quantitative comparison with the studies cited in Section 1 is not possible because their pressure ratios, stroke times and instrumentation differed from those of the present unit. The lower temperature has two consequences. First, the ideal gas law indicates that air at 30.75 °C is about 2% denser than air at 36.75 °C at the same pressure and volume. Second, the results suggest that, at this scale, no separate heat exchange hardware was needed to limit the temperature rise, whereas established plants rely on recuperators and fuel combustion to manage compression heat (Budt *et al.* 2016).

Near-isothermal compression is slow, because heat transfer takes time. A liquid piston must therefore move more slowly than an adiabatic piston to remain close to isothermal, so that less air is compressed per stroke and each stroke takes longer. This is consistent with the reported trade-off between efficiency and power density in liquid piston compressors (Wieberdink *et al.* 2018: 1025), which porous inserts have been proposed to relieve by enlarging the heat transfer area (Yan *et al.* 2015: 40). The present unit had no such inserts, and compression speed and storage density were therefore traded for a cooler compression step. Adiabatic compression, by contrast, stores part of the work as heat in the air and so holds more energy for a given change in volume, but that heat must then be stored or lost (Luo *et al.* 2016).

Several limitations apply. The temperature rise was used as an indicator of heat loss, whereas electrical energy consumption, compression time and round-trip efficiency were not measured, so no efficiency gain is claimed from these data. The temperature was measured in the storage tank and not inside the stroke tank during the stroke, and the temperature record had a resolution of 0.25 °C, so differences of 0.5 °C or less at low pressure were close to the resolution of the record. The pressure transducer had an accuracy of ±1% of full scale (±0.12 bar). The data presented comprise one record for each configuration, and no repeat-test statistics are reported. The benchtop scale and the maximum pressure of 4.44 bar are also far below those of a grid-scale system, and the benchtop result cannot show whether LP-CAES would compete with established plants in round-trip efficiency, storage duration or cost.

5. Conclusion

This study designed, fabricated and tested a two-tank liquid piston air compressor in which water replaced the solid piston, and compared its pressure–temperature behaviour with that of a conventional CAES configuration between 0.5 bar and approximately 4.4 bar. The temperature of the conventional configuration rose by 7.0 °C (from 29.75 °C to 36.75 °C), whereas that of the water-assisted unit rose by 1.5 °C (from 29.25 °C to 30.75 °C). The temperature rise was therefore about 79% smaller, and the final temperature was 6.0 °C lower. The results show that a plain water piston suppressed the heat generated during compression in the benchtop unit without a separate heat exchanger, which is significant because the isothermal efficiency of adiabatic compression falls as

the volume ratio decreases. This benefit was obtained at the cost of a longer stroke time and less air compressed per stroke. Because only pressure and temperature were measured, the findings do not establish energy consumption, round-trip efficiency, storage duration or cost, and they apply to benchtop scale and low pressure.

Future work will investigate the effect of liquid piston velocity on the thermal behaviour and compression performance of the unit. The unit will be operated at several controlled velocities under comparable compression conditions and target pressure, with air temperature, water temperature, pressure, compression time and electrical energy consumption measured for each velocity, so that the velocity that minimises the temperature rise and heat generation can be determined and an empirical correlation can be developed and validated. Longer-term plans include a pilot-scale unit with high-pressure tanks, an assessment of salt cavern storage, an automated control system and the replacement of the gas turbine with a Francis turbine.

Declarations

Author contributions. Krisnan K: Investigation, Methodology, Writing (original draft), Writing (review and editing), Validation, Visualization, Conceptualization, Formal analysis. Vijayamohan Mankayakarasi Brathikan: Funding acquisition, Project administration, Supervision, Conceptualization, Methodology, Investigation, Formal analysis. Janarthanan Venkatachalam: Data curation, Visualization, Validation, Supervision, Project administration, Resources, Software, Conceptualization, Formal analysis. Sangeetha N: Investigation, Supervision, Project administration, Methodology.

Funding. This research was supported by RIACT (Grant No. 2526RG-NC01) & Research Cell (Grant No. 2030-006) – Kumaraguru Institutions and STEM Maker Bhavan Foundation.

Awards. RIACT - Kumaraguru Institutions (2526RG-NC01); Research Cell - Kumaraguru Institutions (2030-006); and STEM Maker Bhavan Foundation

Conflicts of interest. The authors declare no competing interests.

Data availability. All data generated or analysed during this study are included in this paper.

Generative AI. Generative AI is utilised for drafting the Manuscript.

References

Barbour, Edward; Wilson, I.A. Grant; Radcliffe, Jonathan; Ding, Yulong; Li, Yongliang (2016) 'A review of pumped hydro energy storage development in significant international electricity markets', *Renewable and Sustainable Energy Reviews*, 61, pp. 421-432. Available at: https://doi.org/10.1016/j.rser.2016.04.019

Broniszewski, Mariusz; Werle, Sebastian (2018) 'The study on the heat recovery from air compressors', *E3S Web of Conferences*, 70, pp. 03001. Available at: https://doi.org/10.1051/e3sconf/20187003001

Budt, Marcus; Wolf, Daniel; Span, Roland; Yan, Jinyue (2016) 'A review on compressed air energy storage: Basic principles, past milestones and recent developments', *Applied Energy*, 170, pp. 250-268. Available at: https://doi.org/10.1016/j.apenergy.2016.02.108

Çengel, Y.A.; Boles, M.A. (2015) *Thermodynamics: an engineering approach*. 8th edn. New York: McGraw-Hill Education.

Crotogino, F.; Mohmeyer, K.-U.; Scharf, R. (2001) 'Huntorf CAES: more than 20 years of successful operation', *Proceedings of the SMRI Spring Meeting, Orlando, USA, 15–18 April 2001*.

Evans, Annette; Strezov, Vladimir; Evans, Tim J. (2012) 'Assessment of utility energy storage options for increased renewable energy penetration', *Renewable and Sustainable Energy Reviews*, 16(6), pp. 4141-4147. Available at: https://doi.org/10.1016/j.rser.2012.03.048

Kaiser, Friederike; Weber, Roman; Krüger, Uwe (2018) 'Thermodynamic Steady-State Analysis and Comparison of Compressed Air Energy Storage (CAES) Concepts', *International Journal of Thermodynamics*, 21(3), pp. 144-156. Available at: https://doi.org/10.5541/ijot.407824

Luo, Xing; Wang, Jihong; Krupke, Christopher; Wang, Yue; Sheng, Yong; Li, Jian; Xu, Yujie; Wang, Dan; Miao, Shihong; Chen, Haisheng (2016) 'Modelling study, efficiency analysis and optimisation of large-scale Adiabatic Compressed Air

Energy Storage systems with low-temperature thermal storage', *Applied Energy*, 162, pp. 589-600. Available at: https://doi.org/10.1016/j.apenergy.2015.10.091

Odukomaiya, Adewale; Abu-Heiba, Ahmad; Gluesenkamp, Kyle R.; Abdelaziz, Omar; Jackson, Roderick K.; Daniel, Claus; Graham, Samuel; Momen, Ayyoub M. (2016) 'Thermal analysis of near-isothermal compressed gas energy storage system', *Applied Energy*, 179, pp. 948-960. Available at: https://doi.org/10.1016/j.apenergy.2016.07.059

Qin, Chao; Loth, Eric (2014) 'Liquid piston compression efficiency with droplet heat transfer', *Applied Energy*, 114, pp. 539-550. Available at: https://doi.org/10.1016/j.apenergy.2013.10.005

Raju, Mandhapati; Khaitan, Siddhartha Kumar (2012) 'Modeling and simulation of compressed air storage in caverns: A case study of the Huntorf plant', *Applied Energy*, 89(1), pp. 474-481. Available at: https://doi.org/10.1016/j.apenergy.2011.08.019

Van de Ven, James D.; Li, Perry Y. (2009) 'Liquid piston gas compression', *Applied Energy*, 86(10), pp. 2183-2191. Available at: https://doi.org/10.1016/j.apenergy.2008.12.001

Wang, Jidai; Lu, Kunpeng; Ma, Lan; Wang, Jihong; Dooner, Mark; Miao, Shihong; Li, Jian; Wang, Dan (2017) 'Overview of Compressed Air Energy Storage and Technology Development', *Energies*, 10(7), pp. 991. Available at: https://doi.org/10.3390/en10070991

Wieberdink, Jacob; Li, Perry Y.; Simon, Terrence W.; Van de Ven, James D. (2018) 'Effects of porous media insert on the efficiency and power density of a high pressure (210 bar) liquid piston air compressor/expander – An experimental study', *Applied Energy*, 212, pp. 1025-1037. Available at: https://doi.org/10.1016/j.apenergy.2017.12.093

Yan, Bo; Wieberdink, Jacob; Shirazi, Farzad; Li, Perry Y.; Simon, Terrence W.; Van de Ven, James D. (2015) 'Experimental study of heat transfer enhancement in a liquid piston compressor/expander using porous media inserts', *Applied Energy*, 154, pp. 40-50. Available at: https://doi.org/10.1016/j.apenergy.2015.04.106

Zhang, Xinjing; Xu, Yujie; Zhou, Xuezhi; Zhang, Yi; Li, Wen; Zuo, Zhitao; Guo, Huan; Huang, Ye; Chen, Haisheng (2018) 'A near-isothermal expander for isothermal compressed air energy storage system', *Applied Energy*, 225, pp. 955-964. Available at: https://doi.org/10.1016/j.apenergy.2018.04.055

HOW TO CITE THIS PAPER

K, K., Brathikan, V. M., Venkatachalam, J. and N, S. (2026). Investigation of a Liquid Piston Air Compressor for Near-Isothermal Compression and Enhanced Energy Efficiency: Experimental evaluation of a benchtop water-piston unit for compressed air energy storage. In: *Proceedings of the 22nd International Conference on Sustainable Energy Technologies (SET2026)*, Kuala Lumpur, Malaysia, 13 to 15 August 2026. Caravel Press, pp. 192–200. ISBN 978-1-995850-00-9. ISSN 2978-4387. https://doi.org/10.65582/set.2026.016

COPYRIGHT AND LICENCE

© 2026 The Author(s). This is an open access paper distributed under the terms of the Creative Commons Attribution (CC BY 4.0) licence, which permits unrestricted use, distribution and reproduction in any medium, provided the original work is properly cited.

WSSET World Society of Sustainable Energy Technologies Organised by the World Society of Sustainable Energy Technologies. Published by Caravel Press.